CITY OF AUBURN

ENGINEERING DESIGN & CONSTRUCTION MANUAL

AUBURN

Prepared by the Engineering Services Department
Latest Revision: ***August 1, 2026***

This page intentionally left blank.

Contents

1.0 GENERAL INFORMATION:……1-1

1.1 INTRODUCTION……1-1
1.1.1 Purpose of the Manual……1-1
1.1.2 Use of the Manual……1-1
1.1.3 Authority (Governing Regulations)……1-2
1.1.4 Fines and Penalties……1-2

1.2 ACRONYMS AND DEFINITIONS……1-3
1.2.1 Purpose……1-3
1.2.2 Word Usage……1-3
1.2.3 Abbreviations……1-3
1.2.4 Acronyms……1-4
1.2.5 Definitions……1-5

1.3 DEVELOPMENT PROCESS……1-24
1.3.1 Overview……1-24
1.3.2 Site Plan Project……1-24
1.3.2.1 Rezoning……1-24
1.3.2.2 Permitted Uses……1-24
1.3.2.3 Conditional Uses……1-24
1.3.2.4 Traffic Study……1-25
1.3.2.5 Development Committee……1-25
1.3.2.6 Engineering Plans……1-26
1.3.3 Subdivision……1-26
1.3.3.1 Rezoning……1-26
1.3.3.2 Lot Layout Plans……1-26
1.3.3.3 Preliminary Plat……1-27
1.3.3.4 Engineering Plan……1-27
1.3.3.5 Final Plat……1-27
1.3.3.6 Bonding……1-27
1.3.3.7 Traffic Study……1-28
1.3.3.8 Development Committee……1-28
1.3.4 Development Review Team (DRT)……1-29
1.3.4.1 DRT Process Overview……1-29
1.3.4.2 Pre-construction Meeting……1-30
1.3.4.3 DRT Submittal Requirements……1-30
1.3.4.4 DRT Forms and Checklists……1-32
1.3.4.5 Final Approval……1-33
1.3.4.6 DRT Process Flowchart……1-33
1.3.5 Permits……1-35
1.3.5.1 Demolition Permit……1-35

Contents

1.3.5.2 Burn Permit……1-35
1.3.5.3 Erosion and Sedimentation Control Permit……1-35
1.3.5.4 Clearing, Grading, and Utility Permit……1-36
1.3.5.5 AWWB Water Main Connection Permit……1-36
1.3.5.6 Blasting Permit……1-37
1.3.5.7 Zoning Certificate……1-37
1.3.5.8 Building Permit……1-37
1.3.5.9 Sign Permit……1-38
1.3.5.10 Sanitary Sewer Connection Permit……1-38
1.3.5.11 Other Permits……1-38

1.4 PROJECT COMPLETION REQUIREMENTS – CONSTRUCTION……1-40
1.4.1 Approved Plans and Revisions……1-40
1.4.2 Materials……1-40
1.4.2.1 Submittals……1-40
1.4.3 Installation Requirements……1-41
1.4.4 Inspection and Testing……1-41
1.4.5 Contacts……1-41

1.5 PROJECT COMPLETION REQUIREMENTS – AS-BUILT DRAWINGS……1-42
1.5.1 Surveying……1-42
1.5.2 Engineering ……1-45
1.5.3 Submittal……1-46

1.6 PROJECT COMPLETION REQUIREMENTS - EASEMENTS……1-48
1.6.1 Discussion……1-48
1.6.2 Dedication by Document……1-49
1.6.3 Dedication by Plat……1-49
1.6.4 Easement Language……1-50

1.7 PROJECT COMPLETION REQUIREMENTS – AGREEMENTS……1-51
1.7.1 Hold Harmless and Indemnity……1-51
1.7.2 Easement Encroachment……1-51

1.8 PROJECT COMPLETION REQUIREMENTS – ACCEPTANCE……1-52
1.8.1 Authorities……1-52
1.8.2 Preliminary Acceptance……1-52
1.8.3 Final Acceptance……1-53

1.9 PROJECT COMPLETION REQUIREMENTS – WARRANTY PERIOD……1-54

Contents

1.10 PROJECT COMPLETION REQUIREMENTS – FEES AND CHARGES..……....1-55
1.10.1 Discussion...……..……..... 1-55
1.10.2 Water and Sewer Fee Estimates……...……..1-55

1.11 UPDATES AND WAIVERS TO THE MANUAL……...……..... 1-56
1.11.1 Updates……..…….....1-56
1.11.2 Project-Specific Waivers……...……..……1-56
1.11.2.1 Waiver Criteria……..……1-56
1.11.2.2 Procedure……...…… 1-56

Appendix A.
A-1 Site Development Application for DRT Submittal
A-2 Subdivision Application for DRT Submittal
Appendix B.
B-1 Site Development Plans Engineering Checklist
B-2 Subdivision Construction Plans Engineering Checklist
B-3 Site Plan Sufficiency Checklist
B-4 Drainage Checklist and Stormwater Drainage Forms
B-5 Signature Bond for Development
Appendix C. Hold Harmless Agreement
Appendix D. Easement Encroachment
Appendix E.
E-1 Request for Design and Construction Standard Waiver Form
E-2 Amendments

2.0 TRAFFIC SIGNAL DESIGN GUIDELINES:…….. 2-1

2.1 SIGNAL DESIGN ELEMENTS……...…….….. 2-1
2.1.1 Signal Heads……2-1
2.1.2 Signal Supports…… 2-1
2.1.3 Cabinet and Controller Equipment……..…… 2-2
2.1.4 Communications…….……..... 2-2
2.1.4.1 Extension of Existing System……..……..…….…… 2-2
2.1.4.2 New System Implementation……....…….……2-3
2.1.5 Signal Wiring, Conduit and Junction Boxes……..... 2-3
2.1.6 Power Supply……...…… 2-4
2.1.7 Vehicle Detection…….…….……... 2-4
2.1.7.1 Stop Line Detection.……..…….…… 2-5
2.1.7.2 Advanced Detection……..…….…….……..... 2-5
2.1.7.3 Video Detection...…….…….……...2-5
2.1.7.4 Wireless Detection...…….…….…….....2-6

Contents

2.1.8 Railroad Pre-Emption……2-6
2.1.9 Intersection Signage…… 2-6
2.1.10 Pedestrian Signal……2-7
2.1.10.1 Warrants……2-8
2.1.10.2 Sequence……2-8
2.1.10.3 Timing……2-8
2.1.11 Intersection Lighting…… 2-9

2.2 SIGNAL TIMING…… 2-10
2.2.1 Cycle Lengths…… 2-10
2.2.2 Actuated Timing Parameters…… 2-10
2.2.3 Signal Timing Plans…… 2-10

2.3 PLANS PRODUCTION…… 2-11
2.3.1 Traffic Signal Notes…… 2-11
2.3.2 Signal Plan……2-11
2.3.2.1 Installation Notes…… 2-11
2.3.2.2 Signal Head Displays…… 2-11
2.3.2.3 Signage Displays…… 2-12
2.3.2.4 Pre-Emption Phasing Diagram…… 2-12
2.3.2.5 Signal Sequence Chart……2-12
2.3.2.6 Conflict Monitor Chart……2-12
2.3.2.7 Wiring Diagram and Table……2-12
2.3.2.8 Materials List…… 2-12
2.3.3 Details and Standard Drawings……2-13
2.3.4 Communication Plan……2-13

2.4 CONSTRUCTION…… 2-14
2.4.1 Materials Submittal……2-14
2.4.2 Test Requirements…… 2-14
2.4.3 Inspection…… 2-14
2.4.4 Closeout…… 2-15

Appendix F. Traffic Signal Plans Submittal Checklist
Appendix G. Traffic Signal Notes
Appendix H. Signal Details and Standard Drawings

3.0 TRAFFIC CALMING:…… 3-1

3.1 TRAFFIC CALMING PROCESS SUMMARY…… 3-1

3.2 EXISTING CONDITION ANALYSIS…… 3-2

Contents

3.2.1 Minimum Vehicular Volume…… 3-2
3.2.2 Speed……3-2
3.2.3 Cut Through Traffic……3-2
3.2.4 Accidents……3-3
3.2.5 Street Grades and Alignment……3-3
3.2.6 Transit, School and Emergency Routes…… 3-3

3.3 RESULTS OF TRAFFIC CALMING ANALYSIS…… 3-4

3.4 NEIGHBORHOOD PETITIONS AND COST SHARE…… 3-5
3.4.1 Standard Materials……3-5
3.4.2 Landscaping…… 3-5
3.4.3 Exceptions – Special Material/Landscaping Requests…… 3-5

3.5 REVIEW AND ANALYSIS OF APPLIED SOLUTIONS…… 3-7
3.5.1 Removal……3-7
3.5.2 Re-Evaluation…… 3-7

3.6 CONSTRUCTION…… 3-8
3.6.1 Material Submittal…… 3-8
3.6.2 Test Requirements…… 3-8
3.6.3 Inspection……3-8
3.6.4 Maintenance…… 3-8

Appendix J. Examples of Traffic Calming Measures

4.0 TRAFFIC IMPACT STUDIES:……4-1

4.1 TRAFFIC IMPACT STUDY REQUIREMENTS……4-1
4.1.1 General…… 4-1
4.1.2 Applicability…… 4-1
4.1.3 Applicant Responsibility…… 4-2
4.1.4 Capacity and Safety Issues…… 4-3
4.1.4.1 Vehicular Traffic Improvements……4-3
4.1.4.2 Pedestrian Traffic Considerations and Improvements……4-3
4.1.4.3 Bicycle Traffic Improvements…… 4-3

4.2 TRAFFIC IMPACT STUDY PROCEDURES AND CRITERIA……4-4
4.2.1 Scoping Meeting/Telephone Conference…… 4-4
4.2.2 Evaluation Elements……4-5
4.2.3 Roadway Traffic Volumes/Traffic Counts…… 4-5
4.2.4 Intersection and Approach Level of Service……4-6

Contents

4.2.5 Trip Generation Rate…….. 4-6
4.2.6 Preliminary Land Use Assumptions……..... 4-7
4.2.7 Trip Generation Table……..…….. 4-8
4.2.8 Trip Distribution……..……..... 4-8
4.2.9 Requirements for Additional Lanes...……... 4-8
4.2.10 Intersection Delay..…….……..... 4-8
4.2.11 Driveway Access…….……...……..4-9
4.2.12 Traffic Signals..……..……... 4-9
4.2.13 Mitigation Thresholds and Measures..……..... 4-10
4.2.14 Traffic Signal Operations Improvements..……..... 4-10
4.2.15 Geometric Improvements..…….…… 4-10
4.2.16 Pedestrian/Bicycle Improvements…….…….……..4-11

4.3 TRAFFIC IMPACT STUDY REPORT CONCLUSIONS…….…….…... 4-12
4.3.1 Geometric Improvements……..……..... 4-12
4.3.2 Responsibility……..…….…… 4-12

4.4 TRAFFIC IMPACT STUDY REPORT OUTLINE…….…….…… 4-13

5.0 ROADWAY DESIGN:…… 5-1

5.1 INTRODUCTION……...…….……..…… 5-1

5.2 ROADWAY DESIGN ELEMENTS……...…….…...5-2
5.2.1 Design Controls and Criteria……..... 5-2
5.2.1.1 Street and Road Classifications……...…….. 5-2
5.2.1.2 Design Vehicles……..….…… 5-3
5.2.1.3 Design Speed…….……... 5-3
5.2.2 Horizontal Alignment…….…… 5-4
5.2.3 Vertical Alignment…….….....5-4
5.2.3.1 Sight Distance……...…… 5-4
5.2.3.2 Vertical Grade……..……5-4
5.2.4 Typical Street Section……..…… 5-4
5.2.4.1 Streets…….….... 5-5
5.2.4.2 Non-Curb and Gutter…….…...…..5-6
5.2.4.3 Sidewalks……..……..... 5-6
5.2.4.4 Irrigation……..……..... 5-10
5.2.5 Clear Zone……...…..…5-10
5.2.6 Driveways……..... 5-10
5.2.6.1 Design Criteria…….....5-10
5.2.6.2 Driveway Location…….…..5-11

Contents

5.2.6.3 Driveway Spacing……5-12
5.2.6.4 Driveway Alignment……..… 5-14
5.2.6.5 Shared Driveways……5-14
5.2.7 Bicycle and Pedestrian Facilities…….…….. 5-14
5.2.7.1 Shared Use Paths…….…….....5-14
5.2.7.2 Bicycle Lanes…….…….…….. 5-15
5.2.7.3 Shared Roadway……...……... 5-15
5.2.8 Cul-De-Sacs…….…….…5-15
5.2.9 Frontage Road/Service Drive……..….. 5-16
5.2.10 Median Openings…….……...…..….. 5-16

5.3 INTERSECTION DESIGN ELEMENTS…….…….……..5-18
5.3.1 Angle of Intersection……... 5-18
5.3.2 Development Entrances……..5-18
5.3.2.1 Signs…….....5-18
5.3.2.2 Landscaping……..5-18
5.3.2.3 Islands……5-18
5.3.2.4 Irrigation……5-19
5.3.2.5 Gates…...……5-19
5.3.3 Sight Distance…….. 5-19
5.3.4 Roundabouts……5-21
5.3.4.1 Geometric Characteristics…….....5-21
5.3.4.2 Sight Triangle……5-22
5.3.4.3 Landscaping…….…5-22
5.3.5 Left and Right Turn Lanes ……...……...……... 5-22
5.3.5.1 Turn Lane Warrant Criteria… ……..... 5-22
5.3.5.2 Turn Lane Design Standards…….…… 5-23
5.3.5.3 Left Turn Lanes on Divided Roadways..…….…… 5-25

5.4 DESIGN OF UTILITIES OF STREET RIGHT-OF-WAY…….… 5-26
5.4.1 General Locations……...……. 5-26
5.4.2 General Requirements…… 5-28
5.4.2.1 Excavation and Backfill Requirements…….…… 5-28
5.4.2.2 Open Cut Installation…….…..... 5-28
5.4.2.3 Bore Installation……..……. 5-28
5.4.2.4 Utility Patch Repairs……5-29

5.5 DESIGN OF PAVEMENTS…….… 5-30
5.5.1 New Construction……..….....5-30
5.5.1.1 Asphalt……...5-30
5.5.1.2 Concrete…….….... 5-30
5.5.2 Pavement Repairs/Retrofit……..... 5-30

Contents

5.5.2.1 Asphalt ……. 5-30
5.5.2.2 Portland Cement Concrete……..……..….. 5-31

5.6 STREET LIGHTING……..…….……....5-32
5.6.1 Standard Cobra Head Fixture……..……..5-32
5.6.2 Standard Decorative Fixtures……..... 5-32
5.6.3 Light Plan Approvals…….…….…… 5-32
5.6.4 Decorative Pedestrian Lighting…….…… 5-33

5.7 SIGNING AND PAVEMENT MARKINGS……..…….…….….5-35
5.7.1 Street Name Signs…… 5-35
5.7.2 Regulatory Signs…….. 5-36
5.7.3 Application for Signs (New Development)…….…….5-36
5.7.4 Replacement for Decorative Signs…….……..…. 5-37

5.8 RIGHT-OF-WAY PLANTING……..…….…….….. 5-38

5.9 ACCESS MANAGEMENT AND COORDINATION……... 5-39
5.9.1 Transit Stops……. 5-40

5.10 CONSTRUCTION…….……..……..…. 5-41

5.11 PRIVATE STREETS….….……...……...……..…….5-42

5.12 GREENWAYS.....……...……...……..…….5-43

5.13 STREETSCAPE IMPROVEMENTS FUND.……...……..…….5-44

5.13 TRANSPORTATION IMPROVEMENTS FUND...……...……..…….5-45

Appendix K. Arterial Roads List
Appendix L. Collector and Residential Collector Roads List
Appendix M. Local Commercial/ Local Streets/ Cul-De-Sacs/ Alleys List
Appendix O. Street Details and Standard Drawings
Appendix P. Request for Installation of Traffic Signs
Appendix P-1. Irrigation Policy
Appendix P-2. Decorative Street Signs Policy
Appendix P-3. Downtown Sidewalks and Pedestrian Lighting Map
Appendix P-4. Decorative Pedestrian Lighting Master Plan
Appendix P-5. Turn Lane Requirements by Roadway

Contents

6.0 GEOTECHNICAL:…….…….. 6-1

6.1 INTRODUCTION……..…….…… 6-1

6.2 RETAINING WALLS…….. …….…….……...…..6-2
6.2.1 General Overview……..……..6-2
6.2.2 Internal and External Wall Stability …….....6-2
6.2.3 Geotechnical Investigation……. 6-2
6.2.4 Global Stability…….…… 6-3
6.2.5 Sliding, Overturning, Bearing Capacity, and Settlement…….. 6-3
6.2.6 Backfill Drainage behind Retaining Walls……...… 6-4

6.3 DAM DESIGN GUIDELINES…….....6-5
6.3.1 General Overview……...……6-5
6.3.2 Dam Classification……...…… 6-5
6.3.3 Classes of Dams…….…….. 6-5
6.3.4 Design and Safety Requirements…….…… 6-6
6.3.5 Hydrologic/Hydraulic Analysis……...…… 6-7
6.3.6 Inspection Guidelines……..6-7
6.3.7 Types of Inspections……...…… 6-8
6.3.8 Emergency Action Plan…….……..6-9

Appendix Q. Visual Inspection Checklist

7.0 DRAINAGE SECTION:…….. 7-1

7.1 GENERAL.……...…….....….... 7-1
7.1.1 City Stormwater Management Manual……...…… 7-1
7.1.2 Policy and Criteria……..……. 7-1
7.1.3 Environmental Considerations …..……..…… 7-1
7.1.4 Computer Models……..…… 7-2

7.2 STORMWATER HYDROLOGY……..…..…..…7-3
7.2.1 Rainfall Estimation…….…..7-3
7.2.2 Rational Method….……..…….. 7-4
7.2.3 NRCS Curve Number Methodology…….....7-5
7.2.4 United States Geological Survey Regression Equation…..……...…..... 7-6
7.2.5 Permeable Pavement…...……...…..... 7-8
7.2.6 Time of Concentration…….……7-8
7.2.7 Stormwater Runoff Hydrographs…….…… 7-10
7.2.8 Routing of Stormwater Runoff Hydrographs……..…7-10
7.2.9 Hydrologic Analysis for Design of Storm Sewer Systems……7-11

Contents

7.3 STORMWATER DRAINAGE SYSTEM DESIGN…….. 7-12
7.3.1 Stormwater Drainage System Components……7-12
7.3.2 Gutter Flow Calculations……7-13
7.3.3 Curb Opening Inlets…… 7-13
7.3.4 Design Frequency and Spread…….…… 7-14
7.3.4.1 Roadway Inlets…….……..….. 7-15
7.3.4.2 Inlet Spacing……..……...…….……. 7-16
7.3.5 Bridge Decks…….…… 7-16
7.3.6 Storm Sewer Pipes……...…… 7-16
7.3.6.1 Manning's "n" Values……..… 7-16
7.3.6.2 Slopes and Hydraulic Gradient……..…… 7-16
7.3.6.3 Storm Sewer Pipe Size, Length and Access Spacing……7-17
7.3.6.4 Minimum Clearances…….. 7-17
7.3.7 Roadside Ditches…….…… 7-18
7.3.7.1 Design Criteria…….……. 7-18
7.3.8 Culverts…….…… 7-19
7.3.8.1 Discharge…….…….. 7-19
7.3.8.2 Culvert Material…… 7-20
7.3.8.3 Length and Slope…….…...….. 7-20
7.3.8.4 Velocity Limitations…….……..….. 7-20
7.3.8.5 Outlet Protection…….…….…7-20
7.3.8.6 Design Calculations……..7-21

7.4 HYDRAULIC DESIGN OF STORMWATER STORAGE SYSTEMS……..…… 7-22
7.4.1 Comparison Points……..…… 7-22
7.4.2 Types of Storage Systems……7-22
7.4.2.1 Detention Basins……7-23
7.4.2.2 Retention Basin……. 7-23
7.4.2.3 Underground Detention Systems…….. 7-23
7.4.2.4 Regional Detention…….. 7-24
7.4.3 Storage Design……..7-25
7.4.3.1 Length to Width Radio……7-26
7.4.3.2 Release Rate……... 7-26
7.4.3.3 Detention Volume……..……...7-26
7.4.3.4 Depth…….. 7-26
7.4.3.5 Outlet Works……..7-26
7.4.3.6 Sediment Storage…….. 7-26
7.4.3.7 Outlet Protection…….…….…7-27
7.4.3.8 Routing Techniques……..7-27
7.4.3.9 Stage-Storage and Stage-Discharge…….…..…7-27
7.4.3.10 Storage Basin Safety……..7-28
7.4.4 Stormwater Storage Facility Certification…… 7-28

Contents

7.4.5 Operation and Maintenance...7-29

7.5 FEMA REQUIREMENTS...7-30
7.5.1 Floodplain Protection Ordinance... 7-30
7.5.2 Permanent Open Space... 7-30
7.5.3 Building Elevation... 7-31
7.5.4 Bridges...7-31
7.5.4 Installation of Fill Materials...7-31
7.5.5 Filling in Floodplain... 7-32
7.5.6 Conditional Letter of Map Revision...7-32
7.5.7 Letter of Map Revision...7-32
7.5.8 Floodway... 7-33

7.6 DRAINAGEWAYS... 7-34

Appendix R. Storm Sewer Details and Standard Drawings
Appendix S. Stormwater Storage Facility Final Certification
Appendix T. Stormwater Storage Facility Operation and Maintenance Agreement
Appendix T-1. Subdivision Stormwater Storage Facility Operation and Maintenance Agreement

This page intentionally left blank.

SECTION 1

1.0 GENERAL INFORMATION

1.1 INTRODUCTION

The Auburn Engineering Design and Construction Manual (Manual) has been prepared to provide an understanding of the requirements of the Engineering Services Department and to assist in providing the basis for consistent design standards and policies. It sets forth requirements and policies which should be followed to expedite the processing and approval of projects. The Manual primarily focuses on the requirements and role of the Engineering Services Department, which is responsible for the construction, operation and maintenance of public facilities involving streets, alleys, sidewalks, bridges, transportation facilities, traffic signals, drainage facilities, floodplain management, easements and rights-of-way, flood control, environmental concerns, etc.

This Manual also sets forth the minimum requirements for designing and constructing streets, alleys, sidewalks, bicycle facilities, drainage facilities, erosion and sediment control and traffic management facilities. The Engineering Design and Construction Manual is organized into five (5) major sections as follows:

1. General Information
2. Traffic
3. Streets
4. Geotechnical
5. Stormwater

1.1.1 Purpose of the Manual

The purpose of the Manual is to provide the requirements for engineering design and construction of projects within the City of Auburn (City) and its planning jurisdiction. Also, the Manual addresses the objective of protecting the public health, safety and welfare by focusing on sound design and construction requirements.

The Manual consolidates the regulatory requirements of the City. Due to the authoritative and legal nature of some of these documents, it is important to note that this Manual will not, wholly, function as a substitute nor is it intended to replace some regulations. It is intended to complement existing ordinances and policies with the intent of helping the City in maintaining current technical standards pertinent to engineering design and construction.

1.1.2 Use of the Manual

This Manual establishes the standards and requirements governing the quality of design and construction that must be adhered to in preparing plans and constructing improvements for projects. Those doing business with the City are required to use this Manual to ensure compliance with all applicable design and construction standards.

In using the Manual it should be recognized that compliance with the Manual's standards and requirements may not meet all conditions and requirements necessary for approval of a project. Other City Departments as well as State and Federal agencies may have requirements other than those contained in the Manual that must be addressed to obtain approval.

The Manual is not intended to hinder good engineering judgment or creative / innovative efforts; however, any deviations from the requirements of the Manual are subject to the approval of the City Engineer.

1.1.3 Authority (Governing Regulations)

This Engineering Design and Construction Manual is established in pursuance of the authority conferred by Resolution 10-231 of the City Council of the City of Auburn, Alabama, which was adopted on November 2, 2010, and is effective as of January 1, 2011.

1.1.4 Fines and Penalties

Any person committing an offense within the corporate limits of the city, which is in violation of this manual existing or hereafter enacted, shall, upon conviction, be punished by a fine of not more than five hundred dollars ($500). In addition thereto, any person so convicted may be imprisoned or sentenced to hard labor for the city for a period not exceeding six (6) months, at the discretion of the court trying the case. However, no penalty shall consist of a fine or sentence of imprisonment exceeding the maximum fine or sentence of imprisonment established under state law for the commission of substantially similar offenses. The penalty imposed on a corporation shall consist of the fine only, plus costs of court. Each day's violation shall constitute a separate offense unless otherwise provided.

1.2 ACRONYMS AND DEFINITIONS

1.2.1 Purpose

It is the purpose of this section to define words, terms, and phrases contained within this Manual. In the event that a term is not listed in this section; or is not defined elsewhere in the Zoning Ordinance, the City Code, the Subdivision Regulations, or Sections 11-52-30 through 11-52-36 of the 1975 Code of Alabama, as amended; then the conventional meaning of such term shall apply.

1.2.2 Word Usage

The present tense includes the future tense and the future tense includes the present tense. The singular number includes the plural, and words in the plural number include the singular. The word "shall" or "must" is mandatory. The word "may" is permissive and indicates an action or choice that is usually beneficial. The word "lot" includes plot or parcel and the word "building" includes structure.

Where any word specifically defined in the Zoning Ordinance, Subdivision Regulations or other codes of the City is used in this Manual but not specifically defined herein, then the definition contained in the applicable ordinance or code shall apply.

Any confusion or questions regarding the definition of a term used in this Manual or a conflict with the definition as used in other City ordinances or codes shall be decided by the City Engineer, who shall have the right to interpret the definition of any word.

1.2.3 Abbreviations

The following abbreviations and acronyms are referenced within the Manual and are intended to have the following meanings:

AHW	Allowable headwater
ADT	Average Daily Traffic
AC	Acre
cfs	Cubic feet per second
CLOMR	Conditional Letter of Map Revision
CMP	Corrugated metal pipe
CN	Curve number
DF	Density Factor
EAP	Emergency Action Plan
FAR	Floor Area Ratio
fps	Feet per second
ft	Feet
ft/ft	Feet per foot
ft/sec	Feet per second
ft/sec^2	Feet per second squared
ft^2	Square feet
ft^3	Cubic feet
HDPE	High-density polyethylene

HDS	Hydraulic Design Services
HPS	High Pressure Sodium
HEC	Hydraulic Engineering Circular
HW	Headwater
ISR	Impervious Surface Ratio
L/W	Length to Width Ratio
LED	Light-Emitting Diode
LOMR	Letter of Map Revision
LOS	Level of Service
MG	million gallons
mm	millimeter
mph	Miles Per Hour
MSE	Mechanically Stabilized Earth
msl	mean sea level
PMP	Probable Maximum Precipitation
sec	Seconds
SF	Square Feet
TIS	Traffic Impact Study
vpd	Vehicles Per Day
vph	Vehicles Per Hour
W	Watt

1.2.4 Acronyms:

AASHTO	American Association of State Highway and Transportation Officials
ADA	Americans with Disabilities Act of 1990
ADEM	Alabama Department of Environmental Management
ALDOT	Alabama Department of Transportation
ANSI	American National Standards Institute
ASTM	American Society for Testing and Materials
AWWB	Auburn Water Works Board
DRT	Development Review Team
DOT	U.S. Department of Transportation
FEMA	Federal Emergency Management Agency
FHWA	Federal Highway Administration
ITE	Institute of Transportation Engineers
MUTCD	Manual on Uniform Traffic Control Devices
NGVD	National Geodetic Vertical Datum
NCHRP	National Cooperative Highway Research Program
NEMA	National Electric Manufacturers Association
NPDES	National Pollutant Discharge Elimination System
NRCS	Natural Resource Conservation Service
SCS	Soil Conservation Service (former name of NRCS)
SWMM	Stormwater Management Manual
WRM	Water Resource Management

1.2.5 Definitions

When used, the following terms shall have the meanings herein ascribed to them:

85th Percentile Speed: The speed in which 85% of the vehicles are traveling at or below.

95th Percentile Speed: The speed in which 95% of the vehicles are traveling at or below.

Abstractions: The portion of a storm's total precipitation that does not become stormwater runoff.

Access Spacing: The point in the pipeline where access is available from the surface, like a manhole or inlet.

ADA: The American with Disabilities Act of 1990 (ADA) prohibits discrimination and ensures equal opportunity for persons with disabilities in employment, State and local government services, public accommodations, commercial facilities, and transportation. It also mandates the establishment of TDD/telephone relay services. The current text of the ADA includes changes made by the ADA Amendments Act of 2008 (P.L. 110-325), which became effective on January 1, 2009. The ADA was originally enacted in public law format and later rearranged and published in the United States Code.

Alley: A public right-of-way primarily designed to provide secondary access to the side or rear of properties.

Allowable Headwater Depth: Maximum depth of flow allowed at any point along the ditch profile, measured from the invert, minus the required freeboard.

ANSI: American National Standards Institute (ANSI), originally known as the American Standards Association published procedures in 1949. This activity of the American Association of Nurserymen, Inc. developed the first standardized system of sizing and describing plants to facilitate trade in nursery stock in the 1920's.

Antecedent Soil Moisture Conditions: Soil moisture at the onset of a rainfall event.

Applicant: One (1) individual who is duly authorized to submit development plans for review, request variances or changes in zoning classification, and apply for any form of development approval with respect to a development site. An Applicant may be the property owner(s), or any person having written authority from the property owner(s). This written authority shall be provided in any form that the Planning Director and/or the City Engineer determine to be appropriate.

Application for Development: The application forms and all accompanying documents required by these regulations or other regulations for the approval of subdivision plans or site plans.

Apron: A platform below a storm drain outlet to protect against erosion.

Arterial Road: A facility that serves as a primary artery of the City intended to mainly carry through traffic and to connect major activity centers in the City and its planning jurisdiction. Its function is to move intra-city and intercity traffic. The streets that are classified as arterials may also serve abutting property; however, their primary purpose is to carry traffic. Arterials should not be bordered by uncontrolled strip development. Access to these facilities should be carefully managed to ensure the capacity of the facility is not compromised by driveways. Arterials vary in width and parking on-street is prohibited.

Base Flood: A flood having a one (1) percent chance of being equaled or exceeded in any given year.

Basin: A basin is an extent of land where stormwater drains downhill into a body of water, such as a river, lake, reservoir, estuary, wetland, or ocean. The basin includes both the streams and rivers that convey the water as well as the land surfaces from which water drains into those channels and is separated from adjacent basins by a drainage divide. The basin acts like a funnel, collecting all the water within the area covered by the basin and channeling it into a waterway. Each basin is separated topographically from adjacent basins by a geographical barrier such as a ridge, hill or mountain, which is known as a water divide.

Backwater: Water backed up or retarded in its course, compared with its normal or natural condition of flow. In stream gauging, a rise in stage produced by a temporary obstruction such as ice or weeds, or by the flooding of the stream below. The difference between the observed stage and that indicated by the stage discharge relation is reported as backwater.

Baffle Wall: A flat board or plate, deflector, guide, or similar device constructed or placed in flowing water or stormwater storage systems to cause more uniform flow velocities, and to divert or guide liquids.

Bank Storage: The water absorbed into the banks of a stream, lake, or reservoir, when the stage rises above the water table in the bank formations, then returns to the channel as effluent seepage when the stage falls below the water table. Bank storage may be returned in whole or in part as seepage back to the water body when the level of the surface water returns to a lower level.

Base Flood Elevation: The height of the base flood, usually in feet, in relation to the National Geodetic Vertical Datum of 1929, the North American Vertical Datum of 1988, or other datum, or depth of the base flood, usually in feet, above the ground surface.

Bearing Capacity: The bearing capacity of soil is the average contact stress between a foundation and the soil which will cause shear failure in the soil.

Berm: A narrow ledge or path as at the top or bottom of a slope or stream bank; or a horizontal step or bench in the upstream or downstream face of an embankment dam.

Best Management Practices: A physical, structural or managerial practice, which has gained general acceptance for its ability to prevent or reduce environmental impacts.

Bicycle Facilities: Portions of the right-of-way allocated to bicycle use, such as bicycle lanes or bicycle routes, or facilities developed exclusively for the use of bicycles and non-motorized transportation, such as bicycle paths.

Bidder: Any individual, firm, partnership, corporation or any acceptable combination thereof submitting a Bid for the advertised work.

Bishop's Method: A method for calculating the stability of slopes.

"C" Factor: The runoff coefficient, C, is a critical element in that it serves the function of converting the average rainfall of a particular recurrence interval to the peak runoff intensity of the same frequency. The magnitude will be affected by antecedent moisture condition, ground slope, ground cover, depression storage, soil moisture, shape of drainage area, overland flow velocity, intensity of rain, etc.

Calendar Day: Every day shown on the calendar, beginning and ending at midnight, Sundays and holidays included.

Capital Improvements Program (CIP): Ranked capital projects based on goals established by the City Council and on established standards for the appropriate provision of services. The CIP outlines a schedule for the expenditure of municipal funds for public physical improvements. It consists of two (2) components: a capital budget, which lists and describes the capital projects to be undertaken during the coming fiscal year, and a capital program, which lists and describes the capital projects proposed to be undertaken during each of the following six (6) years. The CIP is monitored continuously and updated every two (2) years as part of the City's biennial budgetary process.

Certified Survey: The orderly process of determining data relating to the physical characteristics of the earth, the primary purpose of which includes, but is not limited to, determining the perimeter of a parcel or tract of land by establishing or re-establishing corners, monuments, and boundary lines for the purpose of describing and locating fixed points, which has been signed and sealed by a licensed professional surveyor in the State of Alabama according to the standards of practice for surveying in the State of Alabama.

Channel Capacity: The maximum rate of flow that may occur in a stream or channel without causing overbank flooding.

Channel Storage Volume: The volume of water at a given time in the channel or over the floodplain of the streams in a drainage basin or river reach. Channel storage is sometimes significant during the progress of a flood event.

City: The City of Auburn, Alabama.

City Attorney: The licensed attorney designated by the City Council to furnish legal assistance in the administration and enforcement of these regulations.

City Council: The City Council of the City of Auburn, Alabama.

City Engineer: The registered engineer designated by the City Manager to furnish engineering assistance in the administration and enforcement of these regulations.

Collector Road: A street whose primary function is to collect traffic from an area and move it to the arterial street system while also providing substantial service to abutting land uses. A collector roadway will generally have lower design speeds than arterial roadways but higher than local street. Collector roads are shown on the City's Major Street Plan.

Comprehensive Plan: The Combination of the latest adopted version of the City's Land Use Plan, Major Street Plan, Plan for Sewer Service, Plan for Water Distribution Facilities, Bikeway Plan, Green Space and Greenways Plan, and Capital Improvements Program adopted by the Planning Commission and/or City Council for the guidance of the growth and development of the City.

Comprehensive Plan Amendment: Any adopted addition or modification to the Comprehensive Plan.

Concept Plan: A generalized plan showing the entire development site of a conservation subdivision and meeting the requirements of the Auburn Subdivision Regulations.

Conditional Letter of Map Revision: Process where the Federal Emergency Management Agency provides review and comments on a proposed project that would, upon completion, affect the hydrologic or hydraulic characteristics of a flooding source and result in a change to the existing regulatory floodway, effective Base Flood Elevation (100-year) or the Special; Flood Hazard Area (100-year floodplain).

Conservation Subdivision: A development design technique that concentrates buildings on a part of the site to allow the remaining land to be used for open space or preservation of environmentally sensitive areas. The open space may be owned by either a private or public entity.

Consolidation: Process by which soils decrease in volume. It occurs when stress is applied to a soil that causes the soil particles to pack together more tightly, therefore reducing volume.

Constructed Wetland: Wetlands constructed specifically for the purpose of treating wastewater effluent before re-entering a stream or other body of water or being allowed to percolate into the groundwater.

Contract Bonds: The approved bonds furnished by the Contractor and his Surety to guarantee completion of the Contract in accordance with its terms.

Contract Document: The written agreement between the City and the Contractor setting forth the obligations of the parties hereunder for the performance of the prescribed work. The Contract shall include the *Invitation to Bid*, *Instructions to Bidders*, *Proposal*, *Proposal Bond*, *Base Bid*, the *Contract*, *Performance Bond*, *Labor and Materials Payment Bond*, the *Specifications*, *Special Conditions*, addenda, general and detailed plans, and *Notice to Proceed*, as well as any change orders, supplemental agreements and authorized extensions required to complete the work in a substantial and acceptable manner.

Contractor: The individual, partnership, firm, or corporation that has entered into a Contract awarded by the City for the work covered by this Contract.

Control Elevation: A location in the receiving drainage system where the water surface elevation is known.

County: Lee County

Crest: The highest elevation reached by flood waters flowing in a channel, as in crest stage or flood stage. The term crest can also refer to a crest vertical curve used in design processes to change the grade of a roadway.

Critical Depth: The depth of water flowing in an open channel or conduit under conditions of critical flow at which specific energy is a minimum for a given discharge.

Critical Flow: Critical flow occurs when the flow velocity in a channel equals the wave velocity generated by a disturbance or obstruction. In this condition, the Froude number (Fr) = 1. When the wave velocity exceeds the flow velocity (Fr is less than 1), waves can flow upstream, water can pond behind an obstruction, and the flow is said to be subcritical or tranquil. When Fr is greater than 1, waves cannot be generated upstream and the flow is said to be supercritical, rapid, or shooting. In this condition, a standing wave is formed over obstructions in the river bed. In nature, supercritical flow is found only in rapids and waterfalls, but it is often created artificially by weirs and flumes with the aim of measuring discharge.

Crown: The vertex of an arch or arched surface. Center of roadway elevated above the sides.

Curve Number (CN): A number between 0 and 100 that indicates the runoff-producing potential of a soil/vegetation combination when the ground is not frozen.

Cul-de-sac: A local street with one outlet and having an appropriate terminal for the safe and convenient reversal of traffic movement.

Curb Cut: Vehicular entrance onto a public right-of-way from a public or private development. The intersection of two (2) public rights-of-way is not considered a curb cut.

Dam: A barrier that impounds water or underground streams. Dams generally serve the primary purpose of retaining water, while other structures such as floodgates or levees (also known as dikes) are used to manage or prevent water flow into specific land regions.

Deflectors: A plate, baffle, or the like that diverts the flow of a forward-moving stream.

Design Flood: The flood magnitude selected for use as a criterion in designing flood control works. The largest flood that a given project is designed to pass safely. In dam design and construction, the reservoir inflow-outflow hydrograph used to estimate the spillway discharge capacity requirement and corresponding maximum surcharge elevation in the reservoir.

Design Storm: The rainfall or precipitation amount and distribution adopted over a given drainage area, used in determining the Design Flood.

Design Storm Flows: A storm whose magnitude, rate, and intensity do not exceed the design load for a storm drainage system or flood protection project.

Detention Area: An area for the slowing and storage of stormwater runoff.

Detention Basin (Pond): A relatively small storage lagoon for slowing stormwater runoff, generally filled with water for only a short period of time after a heavy rainfall.

Developer: The legal or beneficial owner(s) of a lot or parcel or any land proposed for inclusion in a development, including the holder of an option, contract to purchase, or a lease.

Development: The division of a parcel of land into two (2) or more parcels (See Subdivision); the construction, reconstruction, conversion, structural alteration, relocation, or enlargement of any buildings; any use or change in use of any buildings or land; any extension of any use of land or any clearing, grading, or other movement of land, for which an approved development plan is required pursuant to the Zoning Ordinance or other regulations, codes and ordinances of the City.

Development Agreement: A written contract between the City and a developer that articulates infrastructure commitments and off-site improvements necessary to maintain an appropriate level of service standard and mitigate impacts of a particular development. These commitments include, but are not limited to, improvements to ensure that adequate water, sewer, and traffic infrastructure are maintained and protected.

Development Phase: A portion, part or geographical area within a development site that constitutes a stage of the development project with each stage being capable of existing independently of the other stages.

Development Review Team (DRT): A team of City officials responsible for the review and approval of all engineering/construction plans involved with development within the City. The team consists of the Development Services Executive Director, Public Safety Director, Planning Director, Engineering Services Director, Water Resource Management Director, and the Director of Environmental Services or designee.

Development Site: One (1) or more parcels of land included in a single development plan, and preferably under common ownership, which constitute the entire area of development shown on a site plan or subdivision plat. The development site must include all land needed for required open space, bufferyards, landscaping, parking (except as provided for in the Zoning Ordinance), internal access roads or driveways, and other physical design features needed to serve the proposed development.

Drainage: The removal of surface water or ground water from land by drains, grading, or other means. Drainage includes the control of runoff to minimize erosion and sedimentation

during and after development and includes the means necessary for water-supply preservation or prevention or alleviation of flooding.

Drainage Facilities: Structural and nonstructural elements designed to collect stormwater runoff and convey it away from structures and through the roadway right-of-way in a manner which adequately drains sites and roadways and minimizes the potential for flooding and erosion.

Drainageway: Minor watercourses, ravines, and ditches, natural or man-made, which are defined either by soil type or the presence of intermittent or perennial streams.

Drawings: All officially approved plans, which are on file with the City, or exact reproductions thereof, showing alignment, layout and design of structures, profiles, typical cross-sections, accessory features, and particular location, character, dimensions, and details of the work covered by the Contract.

Easement: The privilege or right of one (1) property owner making limited use of another property owner's adjacent property.

Easement, Public: An easement intended to accommodate utilities and/or drainage facilities; or to provide public access to pedestrian ways, bikeways, greenways, public parks and other public facilities. Such easements shall be accepted for dedication by resolution of the City Council.

Energy Dissipation: Any loss of energy due to change in flow paths, generally by conversion into heat; quantitatively, the rate at which this loss occurs.

Engineer: The company or person designated by the City, acting within the scope of authority and/or the particular duties entrusted to him.

Engineering Plan: Plans prepared by a registered engineer showing details of the design and construction of required improvements in a proposed subdivision and/or site.

Erosion: The process by which rain, running water, waves, moving ice, and wind dislodge the upper layers of soil. As usually employed, the term includes weathering, solution, corrosion, and transportation.

Erosion Control: Measures and actions which are to be taken to control potential erosion and sedimentation problems.

Excess Precipitation: That portion of total precipitation that becomes stormwater runoff during a storm event.

Extended Wet Detention Basin: Combines the treatment concept of the dry detention pond and the wet pond. The treatment volume is divided between the permanent pool and detention storage provided above the permanent pool.

Falling Limb: The portion of the hydrograph immediately following the peak and reflecting the decreasing production of storm flow.

Filling: The depositing of sand, gravel, earth, or other materials to alter the elevation of a given site.

Flood Elevation Profile: The height of flood waters above an elevation datum plane.

Flood Routing: The process of determining progressively downstream the timing and stage of a flood at successive points along a river. Also the determination of the attenuating effect of storage on a flood passing through a valley, channel, or reservoir.

Floodplain: Any land area susceptible to flooding

Floodway: The channel of a river or other watercourse and the adjacent land areas that must be reserved in order to discharge a base flood without cumulatively increasing the water surface elevation more than a designated height.

Forebay: The water behind a dam. A storage basin for regulating water for percolation into groundwater basins.

Foundation: A structure that transfers loads to the earth. Foundations are generally broken into two (2) categories: shallow foundations and deep foundations.

Freeboard: The vertical distance between a design maximum water level and the top of a structure such as a channel, dike, floodwall, dam, or other control surface. The freeboard is a safety factor intended to accommodate the possible effect of unpredictable obstructions, such as ice accumulations and debris blockage that could increase stages above the design water surface.

Geographic Information System (GIS): The City's organized collection of computer hardware, software, geographic data, and personnel designated to efficiently capture, store, update, manipulate, analyze and display forms of geographically referenced information.

Geosynthetic: A fabric-like material made from polymers such as polyester, polyethylene, polypropylene, polyvinyl chloride (PVC), nylon, chlorinated polyethylene, and others. It can serve in several major functions; separation, reinforcement, filtration, drainage, and moisture barrier.

Geotextile: A fabric made from petroleum products or fiberglass. It has four (4) major uses; drainage, filtration, separation, and reinforcement.

Grade: The slope of land or stream bed or a built feature such as a street, curb, gutter, etc, specified in percentage terms.

Gravity Flow: The downhill flow of water or sanitary sewage through a system of pipes, generated by the force of gravity.

Greenway: Interconnected corridors of natural land, preserved as open space, which follow natural, water, or man-made features. They connect people and places together, and when they include trails, they provide routes for alternative non-motorized transportation; a specific type of greenspace.

Headwater Depth: The water level upstream of a culvert or bridge.

Hundred (100) Year Flood: Flood created by a 100-year rainfall event; a storm having a one (1) percent chance of being equaled or exceeded in any given year.

Hundred (100) Year Floodplain: The area of land inundated as a result of the 100-year rainfall event.

Hydraulic Gradient: The gradient or slope of a water table or piezometric surface in the direction of the greatest slope, generally expressed in feet per mile or feet per foot. Specifically, the change in static head per unit of distance in a given direction, generally the direction of the maximum rate of decrease in head. The difference in hydraulic heads (h1 – h2), divided by the distance (L) along the flowpath, or expressed in percentage terms: $I = (h1 - h2)/L \times 100$.

Hydraulic Radius: The cross-sectional area of a stream of water or pipe divided by the length of that part of its periphery in contact with its containing conduit; the ratio of area to wetted perimeter. Also referred to as hydraulic mean depth.

Hydrograph: A graph showing stage, flow, velocity, or other hydraulic properties of water with respect to time for a particular point on a stream.

Hydrologic Soil Group: The classification of soils by their reference to the intake rate of infiltration of water, which is influenced by texture, organic matter content, stability of the soil aggregates, and soil horizon development.

Hyetograph: A chart showing the distribution of rainfall over a particular period of time or a particular geographic area.

Impervious Surface: A surface that does not absorb water. Buildings, parking areas, driveways, roads, sidewalks, and any areas of concrete or asphalt are impervious surfaces.

Impervious surface ratio (ISR): A measure of the intensity of land use, which is determined by dividing the total area of all impervious surfaces on a development site by the total area of the site.

Imperviousness: The portion of a sub-basin, sub-watershed, or watershed, expressed as a percentage, which is covered by surfaces such as roof tops, parking lots, sidewalks, driveways, streets, and highways.

In-situ: Natural, in-place material.

Infiltration: The process whereby the downward movement of precipitation is interrupted and redistributed.

Infiltration Capacity Rate: The maximum rate at which the soil, when in a given condition, can absorb falling rain or melting snow.
Infrastructure: Facilities and services needed to sustain industrial, residential, and commercial activities. Infrastructure may include, but not be limited to, water and sewer lines, streets, communication lines, drainage facilities, and utilities.

Interception: During the first part of a rainfall event, it is the rainfall amount that is stored on vegetative cover.

Interceptor Ditch: A ditch that collects rainfall, allowing it to evaporate without contributing to runoff.

Interstate: Controlled access facilities with four (4) or more lanes that provide fast and efficient movement of large volumes of traffic over a considerable distance by prohibiting access (ingress and egress) except at controlled intervals.

Invert: The floor or bottom of a conduit, junction box, inlet, and manhole.

Jet: A forceful stream of fluid discharged from a narrow opening or a nozzle.

Labor and Materials Payment Bond: The bond posted for the work guaranteeing payment for materials and labor contained in the work, valued at 100 percent of the Contract amount

Lag Time: The time from the center of mass of the rainfall excess to the runoff hydrograph peak.

Lakes and Ponds: Natural or artificial bodies of water which retain water year round. A lake is a body of water of two (2) or more acres. A pond is a body of water of less than two (2) acres. Artificial ponds may be created by dams or may result from excavation. The shoreline of such bodies of water shall be measured from the maximum condition rather than from the permanent pool in the event of any difference.

Letter of Map Revision: Administrative procedure that the Federal Emergency Management Association uses to officially revise the effective Flood Insurance Rate Map.

Level of Service (LOS): A qualitative measure describing traffic conditions along a given roadway or at a particular intersection, including travel speed and time, freedom to maneuver, traffic interruptions, and comfort and convenience as experienced and perceived by motorists and passengers. Six (6) levels are defined from A to F, with A representing the best conditions and F the worst.

Littoral Zone: The region along the shore of a non-flowing body of water, corresponding to riparian for a flowing body.

Local Commercial Street: All minor streets, marginal access streets and cul-de-sacs serving primarily commercial developed property.

Local Residential Streets: All minor streets, marginal access streets and cul-de-sacs serving primarily residential property.

Lot: A parcel of land occupied by, or designated to be developed for one (1) or more buildings or principal uses, and the accessory buildings or uses customarily incidental to such uses including such open spaces and yards as are designed and arranged or required by this Manual for such building, use or development (See also Development Site).

Lot, Corner: A lot abutting two (2) or more streets at their intersection. If the two (2) streets form an angle of more than 135 degrees, as measured at the point of intersection of their center lines, the lot shall not be considered a corner lot.

Lot Depth: The distance between the midpoints of the front and rear lot lines.

Lot, Double Frontage: A lot, other than a corner lot, which has frontage on more than one street.

Lot Frontage: Lot width measured at the street lot line. When a lot has more than one (1) street lot line, lot width shall be measured at each such line.

Lot Line: A line bounding a lot which divides one lot from another or forms a street or any other public or private space.

Lot Width: The horizontal distance between the side lot lines measured at right angles to the lot depth at the right-of-way.

Major Street Plan: The component of the Comprehensive Plan showing the general location of existing and proposed major streets in the City and its planning jurisdiction.

Marginal Access Roadway: A street that runs parallel to a major street, generally an arterial, with the purpose of separating through traffic from local traffic, and to provide access to abutting properties. A service road in commercial/business areas intended to remove traffic from arterials would be considered a marginal roadway. An access street in residential areas intended to remove local traffic from arterials and to buffer abutting residential lots from the effects of highway traffic as well as limit the number of direct driveway accesses to arterials for safety purposes is also considered a marginal roadway.

Master Development Plan: A conceptual plan, meeting the requirements of the Zoning Ordinance and depicting a mixture of land uses, showing an entire development site and all component stages or phases which express the overall development concept for the site at buildout.

Mechanically Stabilized Earth (MSE) Wall: Soil constructed with artificial reinforcing. It can be used for retaining walls, bridge abutments, dams, seawalls, and dikes. The reinforcing elements used can vary but include steel and geosynthetics.

Minimum Floor Elevation: The lowest elevation, in relation to mean sea level, permissible for the construction, erection, or placement of residential and non-residential structures, including basements floors in accordance with the City Code.

Monument: A permanent object serving to indicate a limit to or mark a boundary.

No Rise Certification: A proposed project that encroaches into a floodway, requires a "no rise" certification from a licensed professional engineer in the State of Alabama, which certifies that the proposed project will not result in an increase in the water surface elevation of a 100-year frequency flood event.

Nomograph: A chart that represents an equation containing three (3) variables by means of three (3) scales so that a straight line cuts the three (3) scales in values of the three (3) variables, thus satisfying the equation.

Notice to Proceed: Written notice from the Engineer giving the Contractor the date on which he is to begin the prosecution of the work.

NRCS Curve Number (CN) Method: Relates soil type, soil cover, land use type, and antecedent moisture conditions to a curve number. Used to determine the depth of runoff for a given area.

Open Channel: A system of conveyance channels in which the top flow boundary is a free surface (e.g., canal systems).

Ordinate: The perpendicular distance of a point (x,y) of the plane from the x-axis.

Orifice: As used in water studies, an opening with a closed perimeter, usually sharp edged and of regular form in a plate wall or partition through which water may flow. An orifice is used for the measurement or control of water.

Overtopping: To rise above; exceed in height; tower over.

Owner: A person who, or entity which, alone, jointly or severally with others, or in a representative capacity (including, without limitation, an authorized agent, attorney, personal representative or trustee) have legal or equitable title to any property in question.

Parapets: A solid wall built for the safety of vehicles and pedestrians, or to prevent overtopping.

Parcel: See Lot, Development Site.

Partially Full Subcritical Flow: A flow condition where the velocity is less than the critical velocity and the depth is greater than the critical depth.

Peak Flow: The maximum flow rate of the hydrograph.

Peat Bog: A wet overwhelmingly vegetative substratum that lacks drainage and where humic and other acids give rise to modifications of plant structure and function. Bogs depend primarily on precipitation for their water source, and are usually acidic and rich in plant residue with a conspicuous mat of living green moss. Only a restricted group of plants, mostly mychorrhizal (fungi, heaths, orchids, and saprophytes), can tolerate bog conditions.

Performance Standards: Standards that provide detailed regulations and restrictions by means of minimum criteria, which must be met by uses in order to protect neighbors from adverse impacts of adjoining land uses and to protect the general health, safety and welfare by limiting where uses may be established, insuring that traffic congestion is minimized, controlling the intensity of use, and prescribing other such standards for open space, density, impervious surface coverage, and lot area are delineated that apply in each zoning district.

Planning Commission: The Auburn Planning Commission created by the City of Auburn under the authority of Chapter 52, Article 1, of the Code of Alabama, 1975, as amended.

Plans: See Drawings

Plat:

Preliminary Plat: A map and related materials indicating the proposed layout of a development submitted for preliminary approval in accordance with all requirements.

Final Plat: The map or plan or record of all or a portion of a subdivision, and any accompanying materials presented for final approval and recording as required.

Point of Inflection: Assumed mark on the recession curve of a hydrograph when surface inflow to the channel system ceases.

Pond: See Lakes and Ponds.

Ponding: The natural formation of a pond in a stream by an interruption of the normal streamflow.

Private Access Drive: A driveway or drive, under common ownership, that provides shared vehicular access to multiple residential/nonresidential units and has at least one connection to a public street.

Probable Maximum Precipitation: The greatest depth of precipitation for a given storm duration that is physically possible over a particular drainage basin at a certain time of year.

Probate Judge: The Judge of Probate for Lee County, Alabama.

Project Manager/Inspector: An authorized representative of the City or Engineer, assigned to review any or all portions of materials furnished and work performed by the Contractor.

Proposal: The written offer for the work, when submitted by the Bidder in the required manner on the prescribed Proposal Form properly signed and guaranteed.

Proposal Form: The approved prepared form on which the City requires that formal bids be submitted for the work.

Proposal Guaranty: The certified check, cashier's check or Proposal Bond designated in the Instructions to Bidders to be furnished by the Bidder to guarantee execution of the Contract and furnishing of the bonds for the work contemplated, if it is awarded to him.

Rainfall Excess Hyetograph: A single block of rainfall excess over duration, D.

Rational Method: A simple procedure for calculating the direct precipitation peak runoff from a watershed, using the rainfall intensity, the area of the watershed, and the runoff coefficient appropriate for the type of watershed runoff surface.

Recession Curve: A hydrograph that shows the decreasing rate of runoff following a period of rain or snowmelt. Because direct runoff and base runoff recede at different rates, separate curves, called direct runoff recession curves, are generally drawn.

Regional Detention: Any stormwater runoff facility that will provide detention for two (2) or more commercial or multi-family residential lots.

Registered Engineer: An engineer properly licensed and registered in the State of Alabama.

Registered Land Surveyor: A land surveyor properly licensed and registered in the State of Alabama.

Residential Collector Street: A street whose primary function is to provide direct access to residential properties and residential subdivisions. Typically, residential collector streets collect traffic from local streets in residential neighborhoods and channel it to the arterial and collector system.

Retainage: Money belonging to the Contractor which has been retained by the awarding authority conditioned on final completion and acceptance of all work in connection with a project or projects by the Contractor.

Retaining Wall: A structure that holds back soil or rock from a building, structure or area. Retaining walls prevent downslope movement or erosion and provides support for vertical or near-vertical grade changes.

Retention Pond: A permanent pond used to slow stormwater runoff and promote infiltration into the groundwater. See Wet Retention Pond and Dry Detention Pond.

Return Period: The mean number of such time units necessary to obtain a value equal to or greater than a certain value one (1) time. For example, with a one (1) year interval between observations, a return period of 100-years means that, on average, an event of this magnitude or greater is not expected to occur more often than once in 100 years.

Right-of-Way: A strip of land used or intended to be used for passage of the general public, and occupied or intended to be occupied by a street, road, bicycle path, pedestrian way,

crosswalk, utilities, railroad or similar facility; and dedicated to public use through acceptance by the City Council.

Roadway: The portion of a right-of-way intended for use by vehicular and bicycle traffic.

Riser: A vertical pipe used for drainage.

Rising Limb: The increasing portion of the storm hydrograph. Contrast to Falling Limb.

Scale: The relative proportion of the size of different elements of the built environment to one another; the measurement of the relationship of one (1) object to another.

Scupper: An opening for draining off water, as from a floor or the roof of a building.

Sedimentation: The act or process of depositing sediment from suspension in water. All the processes whereby particles of rock material are accumulated to form sedimentary deposits. Sedimentation, as commonly used, involves not only aqueous but also glacial, aeolian, and organic agents.

Setback: The required minimum distance between a structure and the front, side, or rear lot line. The distance between a building or structure (not including ground-level parking lots or other paved surfaces) from property lines or from other buildings.

Sheet Flow: An overland flow or downslope movement of water taking the form of a thin continuous film over relatively smooth soil or rock surfaces and not concentrated into channels.

Shop Drawings: Fabrication plans for any part of the work including, but not limited to, water and sanitary mains and appurtenances, precast concrete items, structural steel items, or other metal items, and connections thereof, which the Contractor is required to submit to the Engineer.

Shoring: Providing temporary support with shores to a building or an excavation.

Sidewalk: A paved path provided for pedestrian use.

Siltation: The deposition of finely divided soil and rock particles upon the bottom of stream and river beds and in reservoirs.

Site Plan: A plan, drawn to scale by a licensed professional engineer in the State of Alabama or other qualified professional, showing uses, structures, and all other physical features proposed for the development site, including bufferyards, parking, landscaping, and drainage facilities, in accordance with the requirements of the Zoning Ordinance.

Skew Angle: Deviating from rectangularity or a straight line.

Spread: The width of water transported on the pavement measured from the face of the curb.

Specifications: Written technical and other requirements for the Work, prepared by or on behalf of the City, which are on file with the City, (refer to the Publications tab located at https://www.auburnal.gov/engineering-services/publications/ for the City of Auburn Standard Specifications) containing directions, provisions, and technical and general requirements for the Work, together with such as may be added as Supplemental Specifications or Provisions.

Standard Drawings: Drawings approved for repetitive use, prepared by or on behalf of the City, showing details to be used where appropriate which are on file with the City (refer to the Publications tab located at https://www.auburnal.gov/engineering-services/publications/ for the City of Auburn Standard Details).

Standard Specifications: A book of specifications approved for general application and repetitive use. Please refer to the Publications tab located at https://www.auburnal.gov/engineering-services/publications/ for the City of Auburn Standard Specifications.

State: The State of Alabama.

Steep Slopes: Land area where the inclination of the land's surface from the horizontal is fifteen (15) percent or greater. Slope is determined from on-site topographic surveys prepared with a two (2) foot contour interval.

Storm Water Phase II: The federal regulations requiring smaller communities to address stormwater management and requiring coverage by a National Pollutant Discharge Elimination System (NPDES) Permit.

Stream, Ephemeral: A stream that goes dry during rainless periods.

Stream, Intermittent: A stream that flows at the land surface discontinuously along its length as a result of subterranean passages that locally allows the surface water to move through the subsurface.

Stream, Perennial: A natural watercourse which contains flowing water, year around.

Street: Any street, avenue, boulevard, road, parkway, viaduct, drive, or other right-of-way provided for vehicular traffic and travel.

Street Centerline: That line surveyed, monumented and designated by the City as the centerline of a street.

Street Hierarchy: The classification of streets based upon their individual function, as follows:

Interstate
Arterial Road
Collector
Residential Collector Street
Local Commercial Street

Local Residential Streets
Marginal Access Roadway
Cul-de-sac
Alley

Street, Loop: A circular or semi-circular road designed around landscaped greenspace or a rain garden, with outlets that begin and end on the same road. A one-way loop street can be used as an alternative to the cul-de-sac.

Subbasin: A portion of a sub-region or basin drained by a single stream or group of minor streams.

Subcontractor: Any properly qualified individual, firm, or corporation undertaking the performance of any part of the Work under the terms of the Contract, by virtue of any agreement between himself and the Contractor.

Subdivider: Any person who, having an interest in land, causes it directly or indirectly, to be divided into a subdivision as defined herein.

Subdivision: Any division, redivision, or consolidation of a tract, parcel, or lot of land by means of mapping, platting, conveyance, change or rearrangement of boundaries in accordance with the Subdivision Regulations. All subdivisions are also developments (See Development).

Subdivision Jurisdiction: All land located within the corporate limits of the City and within one and one half (1.5) miles thereof, and not located within the corporate limits of any other city or within the subdivision jurisdiction of any other city having a planning commission, in accordance with Chapter 52, Article 2, Section 11-52-30 of the Code of Alabama, 1975, as amended.

Subdivision Regulations: The Subdivision Regulations of the City of Auburn, Alabama.

Subgrade: The soil or rock leveled off to support the foundation of a structure or roadway.

Substrate Surface: Any naturally immersed or submersed solid surface, such as a rock or tree, upon which an organism lives.

Sump: A low-lying place, such as a pit, that receives drainage.

Supplemental Agreement/Change Order: A written agreement executed by the City and the Contractor covering major changes and/or revision or new unit prices and items supplementing or modifying the original Contract.

Surety: The corporate body, licensed under the laws of the State, bound with and for the Contractor for the acceptable performance of the Contract, and also, for the payment of claims recoverable under the Contract Bonds.

Surface Detention: That part of the rain that temporarily remains on the ground surface during rain and either runs off or infiltrates after the rain ends.

Surface Storage: The part of precipitation retained temporarily at the ground surface as interception or depression storage so that it does not appear as infiltration or surface runoff either during the rainfall period or shortly thereafter.

Swale: An open drainage channel used for the conveyance of stormwater.

Tailwater: Water in a river or channel, immediately downstream from a structure.

Time Base: The total time from when runoff begins to the estimated peak flow rate.

Time Lag: The time it takes a flood wave to move downstream.

Time of Concentration: The time required for water to flow from the hydraulically farthest point on the watershed to the gauging station, culvert, or other point of interest.

Time to Peak: The time from the start of the hydrograph to the peak flow.

Traffic Calming: A set of techniques that serves to reduce the speed of traffic in residential areas. Such strategies include lane narrowing, traffic circles, sharp offsets, yield points, sidewalk bulge-outs, speed humps, surface variations, and visual clues on a vertical plane.

Turning Line: A temporary line whose elevation is determined by additions and subtractions of backsights and foresights respectively.

Turnout: A structure that diverts water from a drainageway to a distribution system or delivery point. Turnouts are used at the head of laterals.

Unit Duration: The time over which one (1) inch of surface runoff is distributed for unit hydrograph theory.

Unit Hydrograph: A runoff hydrograph that is produced by one (1) inch (25.4 millimeters [mm]) of excess rainfall distributed uniformly over a watershed and occurring at a uniform rate during a specified period of time.

Urban Forest: Trees growing within urbanized or developed areas. These include street trees, open green spaces, underdeveloped forested areas, trees in municipal parks and playgrounds, trees and vegetation on private property, and trees around public buildings.

Waiver: Modification of certain specific design standards, dependent upon a finding by the City Engineer that extraordinary hardships or practical difficulties peculiar to the land or that such standards are inappropriate in relation to a specific development will result from strict compliance with the Manual and/or the purposes of the Manual may be served to a greater extent by an alternative proposal, provided that such waiver shall not have the effect of nullifying the intent and purpose of the Manual and result in detriment to the public interest.

In granting waivers, the City Engineer may impose such additional conditions as will, in its judgment, secure substantially the objectives of the requirements that are waived.

Water Supply: The system made up of water sources, treatment, and conveyance systems to provide potable water and fire protection to the community.

Watershed: An area of land, due to its natural drainage pattern, that collects precipitation and drains or seeps into a marsh, stream, river, lake or groundwater. Topography is the key element affecting this area of land. The boundary of a watershed is defined by the highest elevations surrounding the stream. A drop of water falling outside this boundary will drain to another watershed.

Weir: A device for determining the quantity of water flowing over it from measurements of the depth of water over the crest or sill and known dimensions of the device.

Wet Retention Basin (Pond): Constructed basins that have a permanent pool of water throughout the year or wet season and generally are found in locations where groundwater is high and/or percolation is poor.

Wetland: An area that is inundated or saturated by surface water or groundwater at a frequency and duration sufficient to support, and that, under normal circumstances, does support, a prevalence of vegetation typically adapted for life in saturated soil conditions, commonly known as hydrophytic vegetation. (Wetlands generally include swamps, marshes, bogs, and similar areas). Standards for defining wetland boundaries consider hydrology, vegetation and soil conditions.

Work (The Work): All performance required of the Contractor under the terms of the Contract.

Working Day: Any Calendar day, exclusive of Saturdays, Sundays and legal holidays on which the Contractor could proceed with construction operations for a period of six (6) hours or more with the normal working forces engaged in performing work on the controlling item or items of work, which normally would be in progress at that time, will be classified as a working day. Saturdays, Sundays and legal holidays on which the Contractor elects to work for a period of four (4) hours or more will be classified as a working day.

Working Drawings: Erection plans, false work plans, framework plans, cofferdam plans, or any other supplementary plans or similar data, which the Contractor is required to submit to the Engineer.

Zoning Ordinance: A set of land use regulations enacted by the local governing body to create districts, which permit certain land uses and prohibit others. Land uses in each district are regulated according to type, density, height and the coverage of buildings.

1.3 DEVELOPMENT PROCESS

1.3.1 Overview

Any development within the City or the territorial jurisdiction of the City is classified as a site plan project or subdivision project. Based on the classification of the development, the review and approval processes may vary. This section will identify the types of developments within the City and give guidance on the type of process to be followed to receive approval. All developments, regardless of size, shall provide adequate infrastructure, including but not limited to, sidewalks, site lighting, fire protection and access, street lighting, and utilities. The Applicant for a development should consult with the Planning Department during the early stages to obtain specific information on the review and approval process.

1.3.2 Site Plan Project

Site plan projects include all proposed non-residential construction projects, as well as certain residential development types such as multiple unit developments (apartment complexes and condominiums) and manufactured home parks. These particular developments are described in greater detail in the Zoning Ordinance. This will also include clubhouses or other ancillary facilities within a residential subdivision. Site plan approvals could require rezoning, conditional use approval and a traffic impact study; however, all site plans are presented to the Development Review Team (DRT) for approval before any construction is allowed on the site.

1.3.2.1 Rezoning

When an application to develop land involves a need for rezoning, the DRT and/or site plan approval shall not be granted prior to approval of the requested rezoning. The rezoning request and conditional use approval (if required) can be addressed at the same meeting; however, a rezoning decision must be rendered before approval of the conditional use. A request to rezone land to zoning districts specified in the Zoning Ordinance may require certain engineering analysis and/or traffic studies.

1.3.2.2 Permitted Uses

The Zoning Ordinance identifies uses which are permitted by right. It shall be the responsibility of the property owner or the owner's authorized representative to coordinate with the Planning Department to determine that the proposed project is a permitted use that meets all provisions of the Zoning Ordinance. If the project is not a permitted use, conditional use approval is required by the City Council.

1.3.2.3 Conditional Uses

The Zoning Ordinance identifies uses which are permitted only upon approval of a conditional use application. The Planning Commission, after holding a public hearing, shall recommend that the conditional use be approved, approved with conditions or denied to the City Council. The City Council then, after holding a public hearing, either approves or denies the proposed conditional use with any additional conditions that may be imposed subject to a site plan that meets all conditions of approval.

1.3.2.4 Traffic Study

Depending on the type, size, and intensity of a development, a Traffic Impact Study (TIS) may be required. The study may be required concurrent with a rezoning request, conditional use request, or during the site plan project approval process. The guidelines for submittal of a TIS are discussed in this Manual in Section 4.0 "Traffic Impact Studies".

1.3.2.5 Development Committee

The Development Committee is chaired by the Planning Director and is comprised of various City Department Heads including Economic Development, Engineering Services, Water Resource Management, Finance, the Office of City Manager, and others as needed.

Because each proposed development project is unique in terms of its infrastructure needs and requirements, the Planning Director exercises discretion in placing a project on the Development Committee agenda for its review. As a result, the Development Committee is convened as needed.

The Development Committee is tasked with evaluating how a proposed project will impact existing public infrastructure or necessitate additional public investment in infrastructure to accommodate the project. More specifically, the Development Committee evaluates the infrastructure impact, availability, and immediate or future needs associated with the development; and, based on that assessment, determines the public costs associated with the provisions of new or improved public infrastructure that are only necessitated because of the proposed development.

The Development Committee is typically involved in developments proposed on recently annexed property on the outer periphery of the City. However, Development Agreements have also been required in certain instances where the project was already zoned and considered to be an "infill" use but the need for infrastructure improvements was necessary.

The Development Committee process begins once a master plan is submitted for review. The Development Committee analyzes the proposal in terms of:

- Infrastructure (roads, water, sewer, traffic control devices)
- Greenways
- Bikeways
- Environmental concerns (wetlands, creeks, etc.)
- City services (garbage/trash/recycling service, fire protection, etc.)

In most cases, the developments referred to the Development Committee will cause a "Development Agreement" to be formulated which articulates two (2) items. The first analyzes what the various impacts and expenses will be and the second depicts how those items will be addressed for the purposes of ensuring that the infrastructure needs associated with the project, and surrounding area, if appropriate, are secured.

Once the analysis is complete, the City Manager or his designee will serve as the central point of negotiation with the developer. Negotiations will address the findings of the Development Committee and identify the financial responsibilities and commitments of

each party. A Development Agreement is then drafted which is ultimately submitted to City Council for its consideration.

It is also important to note, when a proposed development requires improvements and/or reconstruction of City-maintained infrastructure; the developer will be required to provide a Performance Bond prior to the issuance of any permits for construction. This Performance Bond will be required to cover the costs associated with the improvements and/or reconstruction.

1.3.2.6 Engineering Plans

As part of the site plan approval process, full engineering plans are required for submission. Regardless of the size of the development, engineering plans must be approved before any work can begin on the site. Some building expansions do not require submission of full engineering plans, but those are evaluated on a case by case basis. The engineering plans must be reviewed and approved through the DRT as outlined in this Manual in Section 1.3.4 "Development Review Team (DRT)".

1.3.3 Subdivision

The subdivision of land must be in accordance with the requirements of the Subdivision Regulations of the City of Auburn and Lee County and must be approved by the Planning Commission and County Commission, as applicable. It is, therefore, the responsibility of the property owner or the property owner's representative to make application to the Planning Commission of the City of Auburn or Lee County Planning Commission for approval of a proposed subdivision. Developments within the territorial jurisdiction shall be constructed in accordance with Interlocal Agreement approved by the City Council on April 21, 2015, Resolution Number 15-070.

1.3.3.1 Rezoning

When an application to develop land involves a need for rezoning, the DRT and/or subdivision project approval shall not be granted prior to approval of the requested rezoning. The rezoning request and conditional use approval can be addressed at the same meeting; however, a rezoning decision must be rendered before approval of the conditional use. A request to rezone land to zoning districts specified in the Zoning Ordinance may require certain engineering analysis and/or traffic studies.

When plat approval is requested for land that must be rezoned to permit the proposed development of the land to be subdivided, the plat approval shall not be granted prior to approval of the requested rezoning (see the Zoning Ordinance). The rezoning request and subdivision plat approval can be addressed at the same meeting; however, a rezoning decision must be rendered before considering the subdivision plat.

1.3.3.2 Lot Layout Plans

The Subdivision Regulations require the submission of a Lot Layout Plan to the Planning Department prior to the submission of the Preliminary Plat for subdivisions resulting in twenty-five (25) or more lots at complete build-out. Article III of the Subdivision Regulations outline the requirements for a Lot Layout Plan.

1.3.3.3 Preliminary Plat

The information required on a Preliminary Plat and details of the approval process are specified in the Subdivision Regulations. Preliminary Plat approval by the Planning Commission is required prior to submitting engineering plans to the DRT for all subdivisions except Administrative Subdivisions. If the subdivision (or lot consolidation) involves dedication of right-of-way, then a Preliminary Plat must be approved by the Planning Commission even if it involves four (4) or less lots of record. Article III of the Subdivision Regulations outline the requirements for a Preliminary Plat.

1.3.3.4 Engineering Plan

As part of the subdivision project approval process, full engineering plans are required for submission. Regardless of the size of the development, engineering plans must be approved before any work can begin on the site. The engineering plans must be reviewed and approved through the DRT as outlined in this Manual in Section 1.3.4 "Development Review Team (DRT)". For developments within the territorial jurisdiction area of review, engineering plans must be submitted to both the City and County for review and comment. Appendix B of this section includes a checklist containing the requirements for Engineering Plans.

1.3.3.5 Final Plat

The Subdivision Regulations sets forth the requirements and procedure for approval of a Final Plat. To be considered for approval by the Planning Commission and the City Council, the Final Plat must be certified by the City Engineer as meeting all the requirements for street and utility improvements. Prior to considering a Final Plat all improvements must be installed to the satisfaction of the City Engineer as evidenced by a signed statement or a Performance Bond based on an approved engineering estimate of required improvements and approved to form by the City Attorney. Furthermore, any plat that contains the dedication of right-of-way must be approved by the City Council.

The Final Plat shall be accompanied by an engineer's estimate of the costs of any required improvements yet to be constructed. The engineer's estimate must include all remaining items of infrastructure plus contingency costs for erosion control/grassing, street repair, utility adjustments, and other items as deemed necessary by the City Engineer. Article III of the Subdivision Regulations outline the requirements for a Final Plat.

1.3.3.6 Bonding

If the improvements outlined above are not completed and accepted at the time the Final Plat is requested, bonding can be initiated as in the Subdivision Regulations. The bonding shall be in the form of a performance bond with a commercial surety, an irrevocable letter of credit, or a bank certificate of deposit in an amount equal to one hundred twenty-five percent (125%) of the outstanding improvements.

In addition to bonding requirements for subdivisions, any infrastructure work within right-of-way or easements that will be affected, as shown on the approved engineering plans, by a site plan project must post a Signature Bond for the affected infrastructure prior to the issuance of the Erosion and Sediment Control Permit. This can include, but is not limited to, sidewalk, curb and gutter, roadways, striping, street lighting, and utility connections. A copy of the bond is found in Appendix B-6. A separate Completion and Warranty Bond will

be required for any development that includes a sanitary sewer pump station. This bond shall be coordinated through the Water Resource Management (WRM) Department.

Infrastructure improvements for site plan projects not covered by a Development Agreement must also comply with this requirement. See in this Manual in Section 1.3.3.8 "Development Committee" for information related to Development Agreements.

1.3.3.7 Traffic Study

Depending on the type, size, and intensity of a development, a Traffic Impact Study (TIS) may be required. The study may be required concurrent with a rezoning request, conditional use request, or during the subdivision project approval process. The guidelines for submittal of a TIS are discussed in this Manual in Section 4.0 "Traffic Impact Studies".

1.3.3.8 Development Committee

The Development Committee is chaired by the Planning Director and is comprised of various City Department Heads including Economic Development, Engineering Services, Water Resource Management, Finance, the Office of City Manager, and others as needed.

Because each proposed development project is unique in terms of its infrastructure needs and requirements, the Planning Director exercises discretion in placing a project on the Development Committee agenda for its review. As a result, the Development Committee is convened as needed.

The Development Committee is tasked with evaluating how a proposed project will impact existing public infrastructure or necessitate additional public investment in infrastructure to accommodate the project. More specifically, the Development Committee evaluates the infrastructure impact, availability, and immediate or future needs associated with the development; and, based on that assessment, determines the public costs associated with the provisions of new or improved public infrastructure that are only necessitated because of the proposed development.

The Development Committee is typically involved in developments proposed on recently annexed property on the outer periphery of the City. However, Development Agreements have also been required in certain instances where the project was already zoned and considered to be an "infill" use but the need for infrastructure improvements was necessary.

The Development Committee process begins once a master plan is submitted for review. The Development Committee analyzes the proposal in terms of:

- Infrastructure (roads, water, sewer, traffic control devices)
- Greenways
- Bikeways
- Environmental concerns (wetlands, creeks, etc.)
- City services (garbage/trash/recycling service, fire protection, etc.)

In most cases, the developments referred to the Development Committee will cause a "Development Agreement" to be formulated which articulates two (2) items. The first

analyzes what the various impacts and expenses will be and the second depicts how those items will be addressed for the purposes of ensuring that the infrastructure needs associated with the project, and surrounding area, if appropriate, are secured.

Once the analysis is complete, the City Manager or his designee will serve as the central point of negotiation with the developer. Negotiations will address the findings of the Development Committee and identify the financial responsibilities and commitments of each party. A Development Agreement is then drafted which is ultimately submitted to City Council for its consideration.

It is also important to note, when a proposed development requires improvements and/or reconstruction of City-maintained infrastructure; the developer will be required to provide a Signature Bond prior to the issuance of any permits for construction as identified above.

1.3.4 Development Review Team (DRT)

1.3.4.1 DRT Process Overview

The DRT will review engineering plans (site/civil) for all new developments and redevelopments, including additions and site renovations for everything other than single-family residential. The weekly submittal deadline for a DRT application is Wednesday, by the end of the day. Submittals should be done on the City's Permit Portal, which can be found on the City of Auburn web site at https://webgis.auburnalabama.org/permits.

Applications received by the deadline will be reviewed by the Development Review Team and have comments published back to the portal no later than three (3) weeks from the Thursday after the submittal deadline. Submittals made after the deadline will be automatically placed into the review cycle corresponding to the following week's deadline.

One (1) week after comments are published, there will be an optional "Q and A" meeting upon request by the applicant. This meeting is strongly recommended but is not required. Opting out of the Q & A meeting does not affect the schedule for the regular DRT meeting.

Two (2) weeks after comments are published, there will be a DRT Meeting where the reviewers will discuss the revised plans with the engineer and/or applicant. At that time, if all comments have been addressed, each reviewer may approve the plans for their respective departments.

Note: Revised plans must be uploaded on the permit portal no later than the Monday prior to the scheduled DRT Meeting. If revised plans are not submitted by the end of that day, the DRT Meeting for the project will be automatically postponed to the following Thursday, pending submittal of the revised plans.

The City reserves the right to extend the review period for large or complex projects. In such cases, the City may elect to allocate additional time for review and will inform the applicant of the review schedule within 7 days of a complete submittal. For projects that could meet this criteria, the applicant is encouraged to conduct a pre-application meeting to review the project scope prior to submittal, at which time the magnitude and complexity of the project

can be better determined. The remainder of the DRT process flow will be as described herein and illustrated in Figure 1.1 Development Review Process Flowchart.

If, at the first meeting, all comments are addressed to the satisfaction of the DRT then the Applicant will receive ***Approval***. If the Applicant has not addressed all comments to the satisfaction of the DRT, three (3) other actions are possible.

Conditional Approval
A conditional approval may be granted in cases where the remaining issues are few and will not require substantial review time or significant coordination with other departments. If a conditional approval is granted, it is the Applicant's responsibility to address each of the remaining issues to the satisfaction of the respective departments. Generally, once revised plans are submitted, the applicant can expect a response within seven (7) days.

Continuance
A continuance may be granted (or requested by the Applicant. n there are more than a few outstanding issues and/or the outstanding issues are significant in nature. A continuance may be to a date certain but not to exceed six (6) months from the date of the initial meeting.

Denial
A denial may be issued in situations where outstanding issues are very significant and will require a substantial amount of review time by staff. A denial may also be issued if a continuance beyond six (6) months from the date of submittal is effectuated. If a denial is issued, the Applicant must resubmit plans to the DRT and begin the process again, including the payment of all applicable fees.

1.3.4.2 Pre-construction Meeting
Upon receiving DRT approval and submitting the final plans, the project may be scheduled for a Pre-construction Meeting. To schedule a Pre-construction Meeting, the Applicant should contact the Engineering Services Inspections Manager. The Applicant is responsible for ensuring that representatives for the following parties are present at the Pre-construction Meeting:

1. The general contractor
2. The contractor(s) performing the site, paving, and utility work for public infrastructure
3. The engineer of record

For developments constructing public or private streets, the geotechnical consultant and paving contractor should also be present. Representatives from other City Departments will be in attendance at the Pre-construction Meeting as well as representatives from various private utility companies when appropriate. The owner is also encouraged to attend. Typically, a Pre-construction Meeting can be scheduled to occur within one (1) week of the request.

1.3.4.3 DRT Submittal Requirements
Initial DRT application submittals should be made online using the Auburn Permit Portal. The portal can be accessed by directing a web browser to

https://webgis.auburnalabama.org/permits. Alternatively, a link to the portal can be found on the DRT page of the City of Auburn's web site.

In general, most files should be submitted in PDF format. However, some documents may be better suited as Excel or Word files and may be uploaded in their native formats.

Note: A comment response letter should accompany all resubmittals containing a narrative response to address each DRT comment. Additionally, all revised plans should utilize revisions clouds to easily identify the modifications.

Hard copies are not required, nor recommended, for the initial DRT submittal. If the applicant is unable to produce a full digital submittal through the web portal, the City should be contacted about submitting hard copies.

All applications to the DRT are required to contain the following items:

Initial Submittal:

ALWAYS REQUIRED

- PDFs of the engineering plan~~s~~ sheets
- Checklist for Site or Subdivision Construction Plans
- Site Plan Sufficiency Checklist (for Site Development applications)
- A copy of the deed(s)
- Authorization to Act as Applicant Form
- LID/GI Review Form

REQUIRED WHEN APPLICABLE

- DRT Application (only required if not submitting via the Permit Portal)
- Drainage Analysis Report, stamped by engineer (include Drainage Checklist)
- Comment response letter (to accompany revised plan submittals)
- A copy of relevant permits (ADEM, USACE, ALDOT, etc.)
- A copy of signed, off-site easements or agreements, if applicable
- Electrical plans for any required pedestrian lighting
- Traffic Impact Study
- Pump Station Design Worksheet
- Fire Flow Calculations
- Development Water and Sewer Service Application
- Backflow Protection Information Form
- Grease Trap Sizing Calculation Data Sheet
- Stormwater Quality Review Tool

Final Submittals:

- One (1) hard-copy of the final, approved engineering construction plans (signed and sealed)
- PDFs of the final, approved engineering plans (uploaded to the Permit Portal)
- Final, approved versions of any other documents that were revised from the initial submittal

1.3.4.4 DRT Forms and Checklists

The DRT submittal will not be considered complete unless the appropriate checklists are attached, completed-in-full, and stamped and signed by a licensed professional engineer in the State of Alabama. It is also important to note that the checklists are not intended to be all-inclusive. Therefore, the completeness of each checklist does not alleviate the obligation of the designer to meet all City codes, regulations, ordinances, and specifications. The forms and checklists are provided to expedite the review process and provide staff with the basic project information. Not all forms are required for all projects as indicated in the individual form description.

The following checklists and/or worksheets have been made part of this Manual and are attached in Appendix B.

- *Site Development Plans Engineering Checklist (Appendix B-1)* – This checklist must be submitted with every set of engineering construction plans for site developments (conditional & permitted use projects). The checklist must be filled out entirely and stamped by a licensed professional engineer in the State of Alabama.
- *Subdivision Construction Plans Engineering Checklist (Appendix B-2)* - This checklist must be submitted with every set of engineering construction plans for subdivision improvements. The checklist must be filled out entirely and stamped by a licensed professional engineer in the State of Alabama.
- *Site Plan Sufficiency Checklist (Appendix B-3)* – This checklist is to assist in review by the Planning Department and must be submitted with the site plan.
- *Stormwater Drainage Checklist (Appendix B-4)* – This checklist must be submitted for all projects requiring stormwater detention.
- *Stormwater Drainage Forms (Appendix B-5)*
    - Gutter Spread Table
    - Pipe Design Table
    - Pre-Development Conditions Worksheet
    - Post-Development Conditions Worksheet
    - Basin/Sub-Basin Peak Discharge Summary Table
    - Total Peak Discharge Summary Table

The following forms and worksheets can be found on the City website and/or within the WRM Design and Construction Manual.

- *Sediment Basin Design Data Sheet* –The Sediment Basin Design Data Sheet is required to be submitted for any project that will utilize sediment basins.
- *Pump Station Design Worksheet* - This worksheet shall be submitted for any development that proposes to utilize a sanitary sewer pump station.
- *Backflow Protection Information Form* – This form shall be submitted electronically for any development that proposes to connect to the AWWB water distribution system.
- *Development Water and Sewer Services Application* – This application form is required to be submitted electronically for any project proposing to utilize water from the AWWB or sewer service from the City.
- *Grease Trap Sizing Calculation Data Sheet* – This form is required to be submitted electronically for any development utilizing a grease trap.

1.3.4.5 Final Approval

All approvals from other boards must be granted prior to receiving a full DRT approval. It is important to note that the approval will expire, unless construction has commenced, within eighteen (18) months following the date of approval. If the conditional use approval or plat expires, the DRT approval subsequently expires. The Applicant must formally request an extension on the DRT application commensurate with the extension of the conditional use or plat approval. Furthermore, any substantial changes that effects the approved engineering plans before DRT expiration may require updated plans be submitted to the DRT and receive approval by the appropriate board.

1.3.4.6 DRT Process Flowchart

In Figure 1.1 is a Development Review Process Flowchart. This flowchart is meant to summarize the processes to be followed by the DRT and the development submittal Applicant.

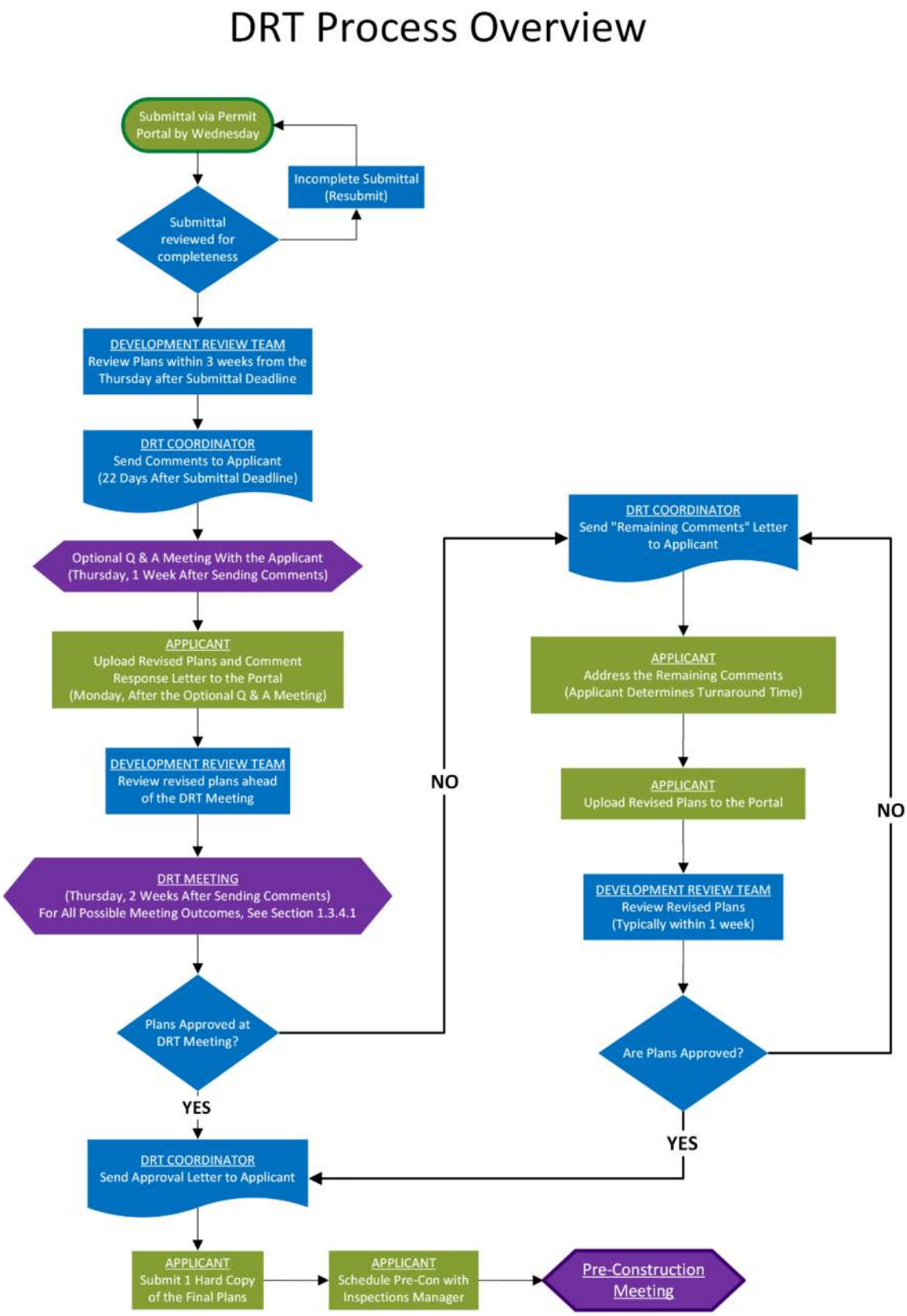

FIGURE 1.1
Development Review Process Flowchart

1.3.5 Permits

Permits are required by the City to assure that proper requirements, conditions and standards are used in design and construction and to assist City Staff in the monitoring of progress and assurance of quality in the constructed project.

There are several departments within the City from which permits are required during specific points in the design and construction process. Pertinent permits that are issued by the City include:

- Demolition Permit (Inspection Services Department)
- Burn Permit (Public Safety Department – Fire Division)
- Erosion and Sedimentation Control Permit (Engineering Services Department)
- Clearing, Grading, and Utility Permit (Engineering Services Department)
- AWWB Water Main Connection Permit (Water Resource Management Department)
- Blasting Permit (Inspection Services Department)
- Zoning Certificate (Planning Department)
- Building Permit (Inspection Services Department)
- Sign Permit (Planning Department)
- COA Sanitary Sewer Connection Permit (Water Resource Management Department)

Each permit is discussed in some detail in the sections to follow. The discussion of each permit is not meant to provide all information regarding that particular permit. The Applicant should refer to the appropriate regulation, ordinance, or code that will describe the permit requirements in more detail.

It is also important to note that performing any work without the required/appropriate permit will result in a stop work order and a potential fine.

1.3.5.1 Demolition Permit

The City requires that a Demolition Permit be acquired to demolish existing structures. The Demolition Permit is issued by the Inspection Services Department.

1.3.5.2 Burn Permit

Burn Permits are issued by the Public Safety Department – Fire Division. For information on Burn Permits, please contact the Fire Department.

1.3.5.3 Erosion and Sedimentation Control Permit

The Erosion and Sedimentation Control Permit is administered by the Engineering Services Department. It will be issued prior to the Clearing, Grading and Utility Permit. However, in order to obtain the Erosion and Sedimentation Control Permit, Erosion and Sediment Control plans must be submitted to and approved by the DRT. All DRT submittal requirements still apply and the review is subject to the same dates and deadlines as any other required DRT submittal. The Erosion and Sedimentation Control Permit allows the

Applicant to perform limited clearing of site vegetation required to install Best Management Practice (BMP) measures around the proposed site.

Prior to issuance of the Erosion and Sedimentation Control Permit, a copy of an approved NPDES Permit from ADEM must be provided to the City, when required. Additionally, a Corps of Engineers Permit may also be required for the site. In those cases as well, the City must be provided with a copy of that permit before issuance of the Erosion and Sedimentation Control Permit.

On large or complex projects, a Pre-construction Meeting may be required to specifically address BMP installation. This type of Pre-construction Meeting does not take the place of the final Pre-construction Meeting after receiving a full, engineering plan approval. Upon approval of the BMP plans and the Pre-construction Meeting being held, if required, an Erosion and Sedimentation Control Permit may be issued.

***NOTE*: No other permits will be issued until full construction plans have been granted approval. A complete submittal for the issuance of concurrent permits can be achieved through the DRT process.**

1.3.5.4 Clearing, Grading, and Utility Permit

The Clearing, Grading, and Utility Permits are administered by the Engineering Services Department. This permit allows the developer to clear site vegetation, begin grading operations and install required site utilities. Clearing, Grading, and Utility Permits may be obtained only after the DRT has approved the engineering plans.

A Clearing, Grading, and Utility Permit will not be issued until after the Pre-construction Meeting has been conducted and soil proctor information has been submitted to the Engineering Services Department.

Upon installation of all site BMP's, the developer must contact the Engineering Services Department and request a field inspection before proceeding with clearing, grading and utility installation. If the inspector determines that all site BMP's have been installed according to the approved Erosion and Sedimentation Control plan, the developer may obtain a Clearing, Grading, and Utility Permit.

1.3.5.5 AWWB Water Main Connection Permit

The Water Works Board of the City (AWWB) requires a permit for all connections made to existing water mains inside the AWWB distribution system. These permits are administered by the WRM Department on behalf of the AWWB. Applicants must notify the WRM Department of the proposed connection at least 48 hours prior to installation and shall submit a plan sheet detailing the connection if plans were not submitted through the DRT.

All connections made to the AWWB distribution system shall be coordinated with and done in the presence of a representative of the AWWB or City Inspector. The AWWB representative or City Inspector shall be certified as an Alabama Grade I Water Operator to inspect the system connection. The Water Main Connection Permit will be provided to the appropriate AWWB representative or City inspector by the WRM Department upon approval for the authorization of the connection. Additional information regarding the

AWWB Water Main Connection Permit application and details associated with the permit and connection can be found in Section 2.4.4 of the WRM Design and Construction Manual.

Due to the potential health hazard that exists as a result of contamination to the potable water system from improper system connections, only authorized connections will be allowed to the AWWB distribution system. Persons making unauthorized connections to the AWWB's distribution system shall be subject to prosecution for theft of service in accordance with Alabama Criminal Code Section 13A-8-10 to 10.3 and for tampering with a public water system in accordance with Section 1432 of the Federal Safe Drinking Water Act.

1.3.5.6 Blasting Permit

The City requires a permit for blasting on any proposed project within the City. These permits are administered by the Inspection Services Department. Applicants must notify the Communications Division and Inspection Services Department about the place and time the blasting will occur. Before issuing the permit, Inspection Services Department will perform a license check to determine that the blasting company is a licensed company within the State of Alabama. The Applicant is advised to consult the City Standard Specifications for information regarding blasting. All blasting will be done in accordance with the laws of the State of Alabama and the International Fire Code, latest edition, adopted by the City of Auburn City Council.

1.3.5.7 Zoning Certificate

The Zoning Ordinance sets forth the regulations and requirements for a Zoning Certificate, which must be granted before any development permitted by the Zoning Ordinance, including accessory and temporary uses, may be established or an existing building altered with respect to its use. The Inspection Services Department will not issue a Building Permit unless the DRT and the Planning Department has granted the developer approved site plans and a Zoning Certificate.

All applications for Zoning Certificates shall be filed with the Planning Director.

Following site plan and/or conditional use approval, an Applicant shall have eighteen (18) months from the date of approval to obtain necessary certificate and permits and begin construction. In addition, an Applicant shall have ninety (90) days from the date of issuance of a Zoning Certificate to begin construction. The beginning of construction is defined as the date on which a Building Permit is issued by the City for the construction, renovation, modification, or other work required.

1.3.5.8 Building Permit

Building Permits issued by the City are administered by the Inspection Services Department. The Inspection Services Department will not issue a Building Permit unless the DRT and the Planning Department has granted the developer approved site plans and a Zoning Certificate. The approved site plans are valid for an eighteen (18) month time period and within that period the developer may obtain the Zoning Certificate and the Building Permit.

The Applicant is allowed to submit plans and specifications to the Inspection Services Department and the DRT concurrently to begin the permitting process. Again, no Building Permit will be issued until the issuance of the Zoning Certificate and the proposed site plan has been approved and is on file in the office of the Inspection Services Department.

Building Permits are discussed in more detail in the Zoning Ordinance. It is also important to note that there are additional permits that may be required by the City after the Building Permit has been issued:

- Electrical Permit
- Plumbing Permit
- Mechanical Permit

These permits will be issued only after the Building Permit has been approved.

1.3.5.9 Sign Permit

The City requires that all signs be permitted prior to installation. In order for a Sign Permit to be processed, a site plan showing the sign location and a scaled drawing are required. For additional information regarding Sign Permits, please refer to the Zoning Ordinance.

1.3.5.10 Sanitary Sewer Connection Permit

The City requires a permit for all connections made to an existing sanitary sewer main within the City's sanitary sewer collection system. These permits are administered by the WRM Department on behalf of the COA. Applicants must notify the WRM Department of the proposed connection at least 48 hours prior to installation and shall submit a plan sheet detailing the connection if plans were not submitted through the DRT.

All connections made to the City's sanitary sewer collection system shall be coordinated and done by a licensed and bonded General Contractor carrying the designation of MU-(S) – Sewer projects on their State General Contractors License. The sanitary sewer connection shall be done in the presence of a WRM Department representative of the City or a City inspector. The Sanitary Sewer Connection Permit will be provided to the appropriate WRM representative or City inspector by the WRM Department upon approval for the authorization of the connection. Additional information regarding the WRM Sewer Connection Permit application and details associated with the permit and connection can be found in Section 3.4.3 of the WRM Design and Construction Manual.

Because of the potential environmental and health hazards that exist as a result of a septic leak from improper sanitary sewer collection system connections, only authorized connections will be allowed to the City's sanitary sewer collection system. Persons making an unauthorized connection to the City's sanitary sewer collection system shall be subject to prosecution for theft of service in accordance with Alabama Criminal Code Section 13A-8-10 to 10.3.

1.3.5.11 Other Permits

While it is not the responsibility of this Manual or the City to inform each development Applicant of all permits that may be required in other areas; it is important to note that other governmental agencies may require additional permits under their respective jurisdictions. The Applicant may be required to obtain various permits from County, State and Federal

agencies for a particular project. It is the responsibility of the Applicant to determine any and all permits that may be required for a particular development.

1.4 PROJECT COMPLETION REQUIREMENTS – CONSTRUCTION

1.4.1 Approved Plans and Revisions

Construction shall not begin without approved construction plans conforming to all applicable design standards in this Manual. Any changes in the design after the approval of the plans must be resubmitted to the Engineering Services Department Plans Review Engineer. The Engineering Services Department Plans Review Engineer will distribute the plans to the appropriate Department for review and approval. During construction, if changes are required, construction in the area of the changes shall halt until such time as the plans have been revised, submitted, and approved.

1.4.2 Materials

The materials required to be used for construction shall be as required by the City Standard Specifications located at https://www.auburnal.gov/engineering-services/publications/. The City may require detailed submittal information for any product being installed. Any product found not to be in compliance with the City Standard Specifications shall be removed and replaced at the developer's expense.

1.4.2.1 Submittals

After approved plans have been issued and prior to construction beginning on public infrastructure, a material submittal package shall be provided to the City for review and approval. The material submittal package shall include all product specifications and material data sheets for public infrastructure that are to be installed during construction, and are to be owned and operated by the AWWB and/or the City. Submittal packages shall be provided to the Engineering Services Inspection Division Manager or the Project Manager. Submittals shall not be provided for infrastructure that is to be owned and operated by other private or public owners or entities.

All material submittals shall clearly detail all necessary product information as applicable including, but not limited to; product ID, dimensions, type, material, construction, strength or rating, graphical schematic, picture or sketch, standard technical specifications, or any other attribute critical to the design and function of the appurtenance. Material submittals for concrete structures such as manholes, vaults, or wet wells shall clearly detail all dimensions, reinforcement, layout of affected appurtenances, hatch or cover specifications, and associated fabrication manufacturer.

Material submittal packages shall be submitted digitally in PDF format. A separate PDF file should be used for each type of submittal package (drainage, water, sanitary sewer, etc). The first page of each PDF should list all included material submittals in the package.

The City will review and approve, conditionally approve (as noted), or reject the material submittals for the specific proposed application in accordance with the requirements detailed in this Manual, and the City Standard Specifications. A digitally-stamped copy of the submittal package will be returned to the developer and contractor.

It is the responsibility of the contractor to be familiar with the standard requirements of the AWWB and the City Standard Specifications prior to submittal. All rejected material submittals shall be resubmitted as required and approved prior to the commencement of construction.

1.4.3 Installation Requirements

Installation and construction shall follow the manufacturers' recommendations and the City Standard Specifications. Where a discrepancy exists between the manufacturers' recommendations and the City Standard Specifications, the more stringent of the requirements shall apply.

1.4.4 Inspection and Testing

The City will assign an inspector for the project. This inspector will be responsible for the inspection of the construction. The inspector shall be present for all water and sewer connections and testing procedures. Testing of the street construction shall follow the City Standard Specifications, Section 10 for Streets. Testing of the sanitary sewer system shall follow the City Standard Specifications, Section 12 for Sanitary Sewer Systems. Testing and disinfection of the water mains and appurtenances shall follow the City Standard Specifications, Section 14 for Water Mains and Appurtenances. All testing and disinfection procedures shall be coordinated with the inspector. The City Standard Specifications shall govern testing requirements for infrastructure not listed above. For developments within the territorial jurisdiction area, the Engineer of Record must conduct inspections of the construction of the subdivision and certify to the City and County, in writing, the compliance with the approved engineering plans regulating the development.

1.4.5 Contacts

During construction activities, the first point of contact for the developer or contractor with the City for project related issues or questions shall be the assigned inspector. Where further technical assistance or clarification is required, the inspector will contact the appropriate Department. Any direction received from the City authorizing changes in design or construction methods from the approved plans or the City Standard Specifications shall be at a minimum acquired in writing. Verbal approval shall not be an acceptable authorization to deviate from the approved plans or standards. Changes in the approved design will typically require revision to the plans to be submitted and approved.

All water and sewer locate requests shall be called into Alabama One Call at 1-800-292-8525.

1.5 PROJECT COMPLETION REQUIREMENTS – AS-BUILT DRAWINGS

As-built drawings are required to be submitted for any development where infrastructure such as water mains and services, sanitary sewer mains and services, and/or storm sewer structures are installed and where any ownership and maintenance of said infrastructure is to be administered by the City or the AWWB. The as-built drawings shall provide precise locations and elevations for all installed infrastructure for the entire approved development phase(s) including any offsite infrastructure or infrastructure in subsequent phases or developments that provide service for the particular development phase(s) seeking approval. The as-built drawings shall be submitted and approved, and a Preliminary Acceptance letter provided to the owner, prior to a Building Permit being issued for Single-Family Residential Projects (fee-simple or condo) and prior to the Certificate of Occupancy for Commercial or Multi-family Residential Projects. Review and inspections associated with the as-built submittal will be completed within 10 business days after receipt of a complete submittal package, including all required digital and hard copies. Within 10 days of the as-built submittal, the applicant will receive either a notification with any outstanding issues noted during the review or a Preliminary Acceptance letter if no issues are noted. In no case will the AWWB set a water meter or activate a water account for a development that has not submitted a complete set of as-built drawings. The City or the AWWB may waive the as-built requirement for small developments that are not installing more than 100 feet of publicly maintained water, sanitary sewer, or storm sewer mains.

1.5.1 Surveying

As-built drawings shall be surveyed and certified by a licensed professional land surveyor (PLS) in the State of Alabama. All coordinates shall conform to the Alabama East State Plane (0101) Coordinate system referenced to the North American Datum (NAD) 83 (2011) EPOCH 2010, for horizontal control, the North American Vertical Datum (NAVD) 88 (CONUS) for vertical control, and the National Geodetic Survey (NGS) GEOID12A (CONUS) model. All measurements must be recorded in US survey feet (Northing and Easting) to the nearest one hundredth of a foot.

As-built drawing features may be surveyed using traditional surveying methods or Real Time Kinematic (RTK) corrected Global Position System (GPS) methods. When utilizing GPS surveying methods, the survey shall reference the following Alabama Department of Transportation (ALDOT) Continuously Operating Reference Station (CORS):

CORS Name:	ALAU
IP Address:	205.172.52.26
Port Number(s):	14302

More information regarding the ALDOT CORS Network can be found at the following website: http://aldotcors.dot.state.al.us. In addition to the ALAU CORS station reference, each as-built drawing submittal shall reference a minimum of two control points physically located on the project site. These controls may be property corners, right-of-way monuments, and site control (ferrous only). Any GPS or traditional surveys that do not reference the

ALDOT CORS shall reference a minimum of two control points set by the City of Auburn. The surveyor shall contact the WRM Department to have the appropriate control points set for the development.

It shall be the responsibility of the developer and/or his agent(s) to maintain these control points throughout the duration of the project. Any required replacement of the project controls shall be at the developer's expense. The required digital submittals discussed in Section 1.5.3 shall show all project control points in order for the submittal to be considered complete. A copy of the survey raw data verifying how the control was set is also required with the final digital submittal.

All points collected using GPS surveying methods (including control points) shall be submitted with the degree of accuracy listed for each survey point. Coordinates and measurements that are provided using GPS technologies shall be classified as either Critical (C) or Noncritical (NC) in terms of the degree of accuracy required for those survey points. Critical coordinates and measurements shall generally be considered as any points used for establishing control (horizontal and vertical) or for purposes of attaining vertical positioning of sanitary or storm sewer rim and invert elevations (including pump stations), or where horizontal or vertical tolerance of the specific feature is minimal. All Critical coordinates and measurements shall be provided with a degree of accuracy of no greater than +/- 0.05 feet horizontal and +/- 0.10 feet vertical with a minimum observation time of 180 epochs. All other GPS coordinates and measurements (horizontal and vertical) shall be considered Noncritical and shall in no case exceed a degree of accuracy of +/- 0.10 feet horizontal and +/- 0.20 feet vertical with a minimum observation time of 30 epochs. All GPS survey points shall be collected with a maximum Position Dilution of Precision (PDOP) value of no greater than 2.00.

In order for the as-built survey to be considered complete for a development, all the following surveyed features, coordinates, and information shall be included, where applicable:

1. Water Distribution Features
    a. Water main location, finished grade elevation, size, and material (one (1) coordinate provided every one hundred (100) feet minimum along straight sections of pipe, every 40 feet minimum where pipe is being deflected, and at all bends and fittings along the main). Note: Main locations should be marked by the contractor during installation with a 2-inch vertical PVC pipe at all bends, fittings, elevation transitions, and at a minimum of every 100 feet in accordance with the standard specifications. (NC). In lieu of installing the vertical PVC pipe for features to be located, survey shots can be made on the exposed feature during installation.
    b. Water valve location (center of valve box cover), cover elevation, size, and type. (NC). For butterfly valves, a shot shall be taken on the valve box cover and the main adjacent to the valve box cover. Note: Valve location shots are not to be counted as the main line shots referenced in 1.5.1.1.a.
    c. Fire hydrant location, finished grade elevation, manufacturer, and year (surveyed in front of the hydrant steamer nozzle at the finished grade elevation).

d. Service line location, finished grade elevation, and size (typically at a meter box or meter vault at the edge of the easement or right-of-way). Approximate location of main line connection shall be field verified and provided on the as-built drawings.

e. Blow-off and air release valve location (center of cover), elevation, size, and manufacturer.

2. Waste Water Collection Features

a. Sewer manhole location, size, material, rim elevation (center of cover), and bottom elevation (center of manhole invert).

b. All main line invert elevations entering or exiting a manhole including proper connectivity to the appropriate manhole Object ID's (service line connection elevations are not required). "Memphis tee" drop connections in a manhole shall only be recorded for the highest vertical connection.

c. Sewer gravity main location, size, and material at all manholes.

d. Service line location and size (typically at a clean out or stub out at the edge of the easement or right-of-way). Approximate location of main line or manhole connection shall be field verified and provided on the as-built drawings.

e. Grease trap location (approximate center), elevation, and size.

f. Pump station site plan, which shall graphically display all pertinent features of an installed pump station site including but not limited to: property boundary, finished grade contours, fence boundary, gates, access road, water service, yard hydrant, concrete slabs, wet well and valve vault perimeter, wet well and valve vault hatch, standby diesel pump, electrical control panel, utility pole, telemetry pole, wet well vent, quick connection piping, force main piping, gravity main piping, manholes, drainage and storm sewer features, streams and applicable buffers, and any other appurtenance or notable feature within the pump station site. Also, the site plan and survey data shall include all the following elevations: wet well rim, wet well floor, valve vault rim, valve vault floor, liquid level floats, onsite gravity inverts, and manhole rims.

g. Sewer force main location, finished grade elevation, size, and material [one (1) coordinate provided every one hundred (100) feet minimum].

h. Sewer force main valve location (center of valve box), finished grade elevation, size, and type (i.e. plug, gate, etc).

i. Sewer force main air release valve location (center of cover), elevation, size, and manufacturer.

j. Horizontal and vertical force main bend location, finished grade elevation, size, and degree.

3. Storm Water Features

As-built drawings are required for all new City maintained stormwater infrastructure. As-built drawings are also required for any modifications to existing City maintained

infrastructure. Modifications include structure type, main size, rim elevation, and material.

a. Storm sewer manhole/inlet location, rim elevation (center of cover), type, and condition, outlet structure. (C).

b. Storm sewer headwall location at pipe terminus, type, presence of rip rap, outlet treatment, and condition. (C).

c. All invert elevations entering or exiting the manhole/inlet or headwall including proper connectivity to the appropriate manhole/inlet or headwall Object ID's. (C).

d. Storm sewer main size, shape, material, and condition. (C).

4. Decorative Pedestrian Lighting

   a. Pedestrian light location, bulb type, pole description, and color.

   b. Conduit between poles, conduit between junction boxes, and conduit to the panel.

   c. Empty conduit for future use by City of Auburn.

5. The PLS certification shall be provided on each as-built plan sheet and shall state:

   "I _____, A LICENSED PROFESSIONAL LAND SURVEYOR IN THE STATE OF ALABAMA, CERTIFY BY TESTAMENT OF AFFIXED SEAL AND SIGNATURE THAT THE AS-BUILT MEASUREMENTS SHOWN HEREON ARE TRUE AND CORRECT TO THE BEST OF MY KNOWLEDGE AND BELIEF AS SURVEYED IN THE FIELD UNDER MY DIRECTION ON _____, 20__.

   _____, PLS No._____

1.5.2 Engineering

As-built drawings shall be certified by the engineer of record responsible for the design of the project infrastructure and utilities or a licensed professional engineer in the State of Alabama with sufficient knowledge of the project. The engineer is responsible for reviewing the installed items for compliance with the approved construction plans and with the Design Standards detailed in this Manual.

Any deviations from the approved construction plans shall be clearly shown in bold type and line weight, with the original design shown and crossed out. The original design shall not be erased on the as-built drawings. In no case will hand drawn "red line" construction plans be accepted for as-built drawings.

The completed as-built drawings shall include the following information:

1. Title block.
2. North arrow.
3. Graphic scale.
4. Overall plan view of the project.

5. Horizontal and vertical coordinates of all established survey control points.
6. Horizontal and vertical coordinates of all sanitary and storm sewer manholes and inverts.
7. All applicable bearings, distances, pipe sizes, slopes, materials, etc.
8. All applicable property line and easement information.
9. The engineer of record certification shall be provided on each as-built plan sheet and shall state:

   "I _____, A LICENSED PROFESSIONAL ENGINEER IN THE STATE OF ALABAMA, CERTIFY BY TESTAMENT OF AFFIXED SEAL AND SIGNATURE THAT THE INFORMATION PROVIDED BY _____, REGISTERED LAND SURVEYOR No. _____ AND SHOWN ON THIS AS-BUILT PLAN HAS BEEN REVIEWED FOR COMPLIANCE WITH THE APPLICABLE ENGINEERING DESIGN STANDARDS OF THE CITY OF AUBURN AND/OR THE WATER WORKS BOARD OF THE CITY OF AUBURN AND DOES COMPLY WITH THOSE STANDARDS TO THE BEST OF MY KNOWLEDGE AND BELIEF.

   _____, PE No._____

1.5.3 Submittal

As-built drawings shall be submitted directly to the WRM Department at 1501 West Samford Avenue. The WRM Department will distribute the drawings to the necessary Departments of the City for review and approval. The review of the submittal and any subsequent comments should be completed within 10 business days. The drawings shall be reviewed and approved prior to a Building Permit being issued for subdivision projects and prior to Certificate of Occupancy for site plan projects. In no case will the AWWB set a water meter or activate an account for a development that does not have an approved set of as-built drawings. The initial submittal package shall include four (4) hard copies printed on 24 x 36 inch plan sheets as well as one (1) digital copy provided on CD.

The completed as-built drawings shall include the following information:

1. Title block.
2. North arrow.
3. Graphic scale.
4. Overall plan view of the project.
5. Horizontal and vertical coordinates of all established survey control points.
6. Horizontal and vertical coordinates of all sanitary and storm sewer manholes and inverts.
7. All applicable bearings, distances, pipe sizes, slopes, materials, etc.
8. All applicable property line and easement information.
9. The hard copies shall be certified by the PLS and PE on each plan sheet with the applicable notation, signature, and seal.

10. All plan sheets shall be clearly marked in the title block with the notation "AS-BUILT".

The digital copies of the as-built drawings shall be submitted in a format compatible to the City of Auburn software. Each digital copy of the as-built drawings shall include a copy of all as-built plan sheets in both DWG and PDF formats. PDF files shall be a minimum resolution of 300 dpi. Each applicable feature provided in the DWG file shall be located in a separate and clearly labeled layer.

In addition to the drawings, each digital copy shall also include the survey data in tabular form as an Excel (XLS) spreadsheet. The layout of the tabular data shall be in accordance with the standard template spreadsheet provided by the City of Auburn for the appropriate feature being collected. All fields associated with that feature shall be populated as designated or required, and any applicable quality control query errors included in the spreadsheet template shall be addressed prior to submittal. The tabular data required is for features that will be imported into the City's GIS database and is not intended to be all inclusive of the survey collection that may be required to adequately compile the as-built drawing information. Additional feature data may be required on the as-built drawings for graphical display of installed conditions that are not specifically requested as part of the tabular data to be submitted.

Upon approval of the initial submittal package, two (2) final hard copies and one (1) digital copy shall be provided.

1.6 PROJECT COMPLETION REQUIREMENTS – EASEMENTS

1.6.1 Discussion

Easements shall be dedicated for all publicly owned and maintained infrastructure that are not located on public right-of-way or covered by an existing easement. Any easements that are needed for the development shall be dedicated in a manner acceptable to the City either by plat or by document. Specific language for the easement dedication shall be prepared by the City and shall be used for the dedication.

No fences, canopy trees, or any other obstructions shall be allowed in easements without prior approval of the City. Where it can be demonstrated that it is not possible to locate a necessary obstruction outside an easement, the City and/or the AWWB may approve the placement of the obstruction with the execution of a Hold Harmless Agreement as defined in Section 1.7.1 of this Manual. The location of the obstruction within the easement shall be such that the conflict with proposed or existing infrastructure is minimized to the maximum extent practical. Approval from the City shall be acquired prior to the placement of any necessary obstruction in an easement. Obstructions placed in easements without prior approval shall be removed, as directed, at no cost to the City or the AWWB.

All permanent easements where public infrastructure is installed shall be graded and smoothed to allow sufficient access and use for mowing equipment and maintenance vehicles prior to acceptance by the AWWB or the City. The permanent easement shall be completely cleared of all trees, brush, boulders, and debris. All rocks shall be buried, crushed, or removed from the easement where, in the opinion of the AWWB or the City, they present a hazard for access and use of the easement. Typically, no rock shall remain on the ground surface that is larger than a No. 1 stone classification. All creek and ditch crossings shall also be made accessible for mowing and maintenance equipment as deemed appropriate by the AWWB and the City prior to acceptance of the public infrastructure.

No water or sewer services shall be activated prior to the actual legal dedication of all necessary easements. All testing and water main disinfection procedures may proceed prior to easements being dedicated in order to complete construction, but domestic services will not be provided until the necessary easements are granted.

All easements needed for the development shall be identified during the plan review process. The standard easement width for water, sewer, and storm drain is based on two (2) times the depth of cover (measured from finished grade to the bottom of the pipe or structure), rounded up to the nearest multiple of ten (10) feet, with a minimum easement width of twenty (20) feet. Easements for installation of water and sewer utilities may require additional width to ensure adequate separation between structures and the installed utility is achieved to allow reasonable excavation of the utility without compromising the structures foundation. Generally, a minimum separation of fifteen (15) feet would be acceptable to the City where depths of the utility are less than ten (10) feet; however, the City reserves the right to request additional easement width based on the site specific circumstances of the easement. The engineer of record shall be responsible for evaluating the foundation design and separation

required on a case specific basis and may provide any applicable design information to the City for consideration in determining the required easement widths. The actual easement width shall be calculated based on the actual installed depths. The infrastructure shall be centered in the easement, and shall be verified with the as-built drawings. If it is determined that the water, sewer, or storm drain line was not installed in the previously dedicated easement to allow for the proper maintenance, the easement shall be promptly rededicated in the installed location.

All water and sewer utility and storm drain easements shall be dedicated to the City as Drainage and Utility Easements unless otherwise approved and shall not be combined with any other utility easements (i.e. gas, electric, communications, etc.). City Drainage and Utility Easements are exclusive and are not to be used to install any other non-City owned and maintained utility. An exception to this would be a perpendicular crossing of another utility. Where other utilities must be installed inside a City Drainage and Utility Easement, and where approved by the City, an Easement Encroachment Agreement will be required with the encroaching utility as defined in this Manual in Section 1.7.2 "Easement Encroachment".

1.6.2 Dedication by Document

Easements to be dedicated by document shall include a legal description of the easement area, a surveyed drawing titled 'Exhibit A' showing the easement limits and the installed location of the utility, as well as a vicinity map showing the general location of the property. The legal description and exhibit shall be prepared by a licensed professional land surveyor in the State of Alabama. The legal description, exhibit, and vicinity map for easements shall be submitted to the City for review and approval with the as-built drawings for the development.

After the legal description and exhibit have been submitted and approved, the City will assist the developer in preparing the easement document, and submitting to the City Council for approval. Proof of ownership will be required prior to the recording of the easement document, and must be in a form acceptable to the City Attorney. The actual recording of the document will be coordinated with the City after the review and approval of the easement document by the City Council.

1.6.3 Dedication by Plat

Easements to be dedicated by plat shall be identified during the review process and shall be identified on the Preliminary Plat included in the plans. All plats shall be prepared by a licensed professional land surveyor in the State of Alabama and shall be submitted to the Planning Department to be routed for review and shall be in accordance with all applicable Zoning Ordinances and Subdivision Regulations. All easements shall be shown and clearly labeled on the plat. The easement widths shall be clearly identified and shall be in accordance with the standard easement width requirements based on installed depths.

All easements shown on the Final Plat shall be in the as-built location of the utility and shall be surveyed by a licensed professional land surveyor in the State of Alabama prior to submittal. If the Final Plat is recorded prior to infrastructure being installed, the recorded plat shall be checked against the surveyed as-built drawings by the City prior to acceptance of the utility. If any discrepancies are discovered between the recorded easement and as-built utility locations or installed depths that, according to the City, would hinder the maintenance or

repair of the infrastructure, the developer/owner will be required to revise the plat and easements as necessary prior to preliminary acceptance of the affected water or sewer infrastructure in question.

1.6.4 Easement Language

The easement wording shall be reviewed by the City and the AWWB for approval. All plans and plats shall include the following standard notation:

- "No permanent structures may be constructed or placed on easements. Fences may be erected perpendicularly across the easement provided there is a minimum twelve (12) foot wide access gate installed. If the gate is to be locked there must be a City approved lock installed in conjunction with the owners lock. No trees shall be planted within ten (10) feet of utilities."
- "By placing obstructions within or encroaching onto the easement, the property owner(s) does for itself, its successors, and assigns agree to indemnify, hold harmless and defend the City of Auburn, its officials, representatives, agents, servants and employees from and against all liability and loss which may be sustained as a result of claims, demands, costs or judgments arising out of the location of the obstruction within the easement including its reasonable costs in defending against any such claims and further agrees to release and discharge the City of Auburn from any damages to the obstruction arising from utility maintenance work within the easement or any damages to the obstruction resulting from its placement in the easement."
- By placing any portion of an irrigation system within the easements or right of way, the property owner does for itself , its successors and assigns agrees to hold harmless and defend the City of Auburn, its officials, representatives, agents, servants, and employees from and against all liability and loss which may be sustained as a result of claims, demands, cost or judgments arising out of the location of the obstruction within the easements or right of way including its reasonable cost in defending against any such claims. The property owner further agrees to release and discharge the City of Auburn from any damages to the irrigation system arising from any work or maintenance work within the granted easement or right of way or any damages to the irrigations system resulting from its placement within the easement or right of way. Irrigation systems are limited to only laterals being placed within any easements or right of way.

1.7 PROJECT COMPLETION REQUIREMENTS - AGREEMENTS

1.7.1 Hold Harmless and Indemnity

There may be certain situations where a sign or other obstruction is requested to be placed on or adjacent to a dedicated easement or in the right-of-way that would hinder the maintenance or repair.

The City shall be notified prior to the construction or placement of any such obstruction and will make the determination if the encroachment will be allowed. A plan sheet shall be submitted to the City detailing the obstruction and its relative location to the easement for approval. If the City decides the obstruction or encroachment will be allowed, the owner may be required to enter into a Hold Harmless Agreement with the AWWB and/or the City. The approved plan shall be attached to the Hold Harmless Agreement as 'Exhibit A' and shall be referenced in the agreement.

The exact format and language of this Hold Harmless Agreement will be determined by the City and the AWWB. All costs associated with the Hold Harmless Agreement will be the responsibility of the developer. This would include any legal fees and recording fees for the document. A sample standard Hold Harmless Agreement is provided in Appendix C, but is subject to modification to fit the site specific request and conditions.

1.7.2 Easement Encroachment

There may be certain situations where other utilities that are not owned by the AWWB or the City are requested to be placed on a dedicated easement.

The City shall be notified prior to the construction or placement of any such utility and will make the determination if the encroachment will be allowed. A plan sheet shall be submitted to the City detailing the extents of the encroachment on the easement for approval. If the City decides the utility encroachment will be allowed, the owner of the utility will be required to enter into an Easement Encroachment Agreement with the AWWB and/or the City. The approved plan shall be attached to the Easement Encroachment Agreement as 'Exhibit A' and shall be referenced in the agreement.

The exact format and language of this Easement Encroachment Agreement will be determined by the City and the AWWB. All costs associated with the Easement Encroachment Agreement will be the responsibility of the developer or the owner of the encroaching utility. This would include any legal fees and recording fees for the document. A sample standard Easement Encroachment Agreement is provided in Appendix D, but is subject to modification to fit the site specific request and conditions.

1.8 PROJECT COMPLETION REQUIREMENTS – ACCEPTANCE

1.8.1 Authorities

The AWWB may accept ownership and maintenance of all public water mains, services, and related appurtenances installed for a development up to any metered connection or approved backflow prevention assembly inside the right-of-way or at the edge of an easement that is directly connected to the AWWB distribution system and that was designed, installed and tested in accordance with the applicable standards detailed in this Manual. The AWWB maintains services connected to the AWWB distribution system up to and including the associated meter. It is the customer's responsibility to maintain the service beyond the AWWB's meter. The customer is also responsible for any maintenance associated with an unmetered fire protection system connected to the AWWB's system beginning at the AWWB's isolation valve. The customer's responsibility includes any backflow prevention assembly installed on a service connection, which shall be maintained, tested, and inspected in accordance with the AWWB's Backflow Prevention and Cross-Connection Control Policy.

The Sewer Division may accept ownership and maintenance of all public sanitary sewer gravity mains, pump stations, and force mains installed for a development inside the right-of-way or easement that connects to the City sanitary sewer collection system and that was designed, installed, and tested in accordance with the applicable standards detailed in this Manual.

The Engineering Services Department may accept ownership and maintenance of all public storm drain infrastructure, streets, sidewalks, and bicycles facilities installed for a development inside the right-of-way or easement that was designed, installed, and tested in accordance with the applicable standards detailed in this Manual. The City does not maintain stormwater storage facilities, but will inspect these facilities annually to ensure proper maintenance and operation by the owner.

1.8.2 Preliminary Acceptance

A development will be eligible for preliminary acceptance of public water and sanitary sewer infrastructure by the AWWB and the City upon completion of the following items (in particular order):

1. Submittal and approval of construction plans in accordance with the applicable standards detailed in this Manual for both water and sanitary sewer design.
2. Construction inspection provided by the AWWB or the City or adequately documented in accordance with the City Standard Specifications for water and sewer construction.
3. Successful testing procedures performed and results documented in accordance with the City Standard Specifications for water and sewer testing.
4. Proper disinfection achieved and documented for all water mains and appurtenances installed in accordance with the City Standard Specifications for water main disinfection.

5. As-built drawings submitted and approved in accordance with this Manual for all water and sewer infrastructure.
6. Final inspection by the AWWB and the City for all water and sewer infrastructure and all noted deficiencies corrected. The final inspection shall be scheduled with the Project Inspector, the Water Distribution Manager, and the Sewer Collection System Manager after all applicable testing and disinfection has been successfully completed for the water and sewer infrastructure and as-built drawings have been submitted to the WRM Department. Sewer pump stations shall be inspected in accordance with the requirements in Section 3.5.11.3 of the WRM Design and Construction Manual.
7. All appropriate Drainage and Utility Easements dedicated in accordance with this Manual in Section 1.6 "Project Completion Requirements – Easements" and the Final Plat signed (if being platted).
8. All necessary Hold Harmless Agreements or Easement Encroachment Agreements executed in accordance with this Manual in Section 1.7 "Project Completion Requirements – Agreements".

The WRM Department will issue a written preliminary acceptance letter upon completion of the items covered in this section. Preliminary acceptance is not granted by the City for storm drain or transportation infrastructure.

1.8.3 Final Acceptance

Final acceptance of water and sewer mains and appurtenances will not be granted by the AWWB or the City until such time that all local construction activity for the entire development phase taking place on the right-of-way or easements in which the water and sewer are located is substantially completed, which is including but not limited to; other utilities, storm sewer construction, major grading, sidewalk installation, and roadway preparation, including curb, subbase, base, or binder placement. If more than twelve (12) months has expired from the date of the preliminary acceptance letter, when final acceptance is requested by the developer, a second final inspection shall be scheduled with the Water Distribution Manager and Sewer Collection System Manager prior to final acceptance being issued. Upon substantial completion of construction and successful correction of all noted deficiencies at the time the final acceptance is requested, the WRM Department will issue a written final acceptance letter.

Final acceptance of storm drain and transportation infrastructure will occur after placement of the final wearing surface and subsequent final inspection by the Engineering Services Department. Any deficiencies noted for correction during the final inspection must be completed before final acceptance is granted. Subdivision Completion Bonds will be released after all City and AWWB infrastructure receives final acceptance.

1.9 PROJECT COMPLETION REQUIREMENTS – WARRANTY PERIOD

The developer is responsible for all damages caused to infrastructure within the development due to construction activity as well as any defects in materials and workmanship associated with the installed infrastructure for a period of not less than one (1) year from the date of the City's final written acceptance of the infrastructure, or the signing of the Final Plat, whichever is later.

All improvements have to be inspected and repaired at the time of the placement of the wearing surface. The bond proceeds can be used for the repair and installation of any and all infrastructure that is not completed by the developer.

Due to the health risks associated with contamination of the potable water supply and regulations associated with maintaining a public water distribution system, only AWWB personnel are authorized to operate or work on water mains connected to the AWWB distribution system. As a result, the AWWB will provide all operation, maintenance, repair, and emergency response services after preliminary acceptance has been issued and the service has been activated for public use, including during the warranty period. The City will also provide repair, and emergency response services for sanitary sewer related issues within the development after preliminary acceptance and during the warranty period if not timely and satisfactorily addressed by the developer.

All costs associated with any necessary repairs or emergency response services provided by the AWWB or the City during the preliminary acceptance or warranty periods due to damages caused by construction activity, or defects in materials or workmanship shall be the full responsibility of the developer including all labor, equipment, and materials required to perform the work. The AWWB or the City will invoice the developer for all such costs

1.10 PROJECT COMPLETION REQUIREMENTS – FEES & CHARGES

1.10.1 Discussion

There are multiple fees associated with obtaining water and sewer services from the AWWB and the City. These fees include, but are not limited to, access fees, deposits, tap fees, and meter set fees. All applicable fees for any new development or redevelopment will be due for both water and sewer services, where provided by the AWWB or the City, at the time the Zoning Certificate is issued and prior to the issuance of a Building Permit. All associated fees shall be paid at the Water Revenue Office at 1501 West Samford Avenue. A current rate schedule of all normally applicable water and sewer fees can be found on the City's website.

1.10.2 Water and Sewer Fee Estimates

During the plan review process, the WRM Department may provide an estimate for access fee credits and charges at locations with existing water and/or sewer accounts. The estimate provided will be based on information derived from the plans submitted and the published rates available on the date of the estimate. The rates are subject to change and are not guaranteed by the estimate. The estimate amount provided will not include any tap fees, meter set fees, or deposits that may also be applicable for the project. All required water and sewer fees shall be paid at the Water Revenue Office prior to the issuance of a Building Permit for the development, and will be based on the published rates at the time the fees are collected.

1.11 UPDATES AND WAIVERS TO THE MANUAL

Updates to this Manual will be made periodically as deemed necessary. These updates will be posted to the City's web site, along with a brief overview of any of the changes made, the reason for the change, and a date the changes will go into effect.

1.11.1 Updates

The users of this Manual are encouraged to suggest changes and/or revisions to the Manual. These suggestions will be considered and, if deemed appropriate, a revision will be made to the Manual. It is expected that this will be updated on an annual basis. Any individual who believes that a change is necessary to the Manual is encouraged to submit the suggestion in writing to the City for consideration.

Periodically, as revisions are made to the Manual, the changes will be posted to the City's website. It is the responsibility of the users of this Manual to make certain that they are using the current version.

1.11.2 Project-Specific Waivers

1.11.2.1 Waiver Criteria

The City may make project specific waivers to an existing City standard when any one (1) of the following conditions applies. It should be noted that the City is not required to make a waiver just because one (1) of the conditions below applies, but these are the only circumstances under which a waiver will be considered:

1. The standard is not applicable to the particular situation.
2. Topography, right-of-way (ROW), or other geographical conditions impose undue hardship on the Applicant or extraordinary environmental damage; and an equivalent alternative that can achieve the same design objective is available and does not compromise public safety.
3. A waiver is required to address a specific design or construction problem that will result in an undue hardship to the Applicant with little or no material benefit to the public, if not granted.
4. New technology is available that results in an economic benefit to the project, accomplishes the same design objective, reduces environmental intrusion, and does not compromise public safety.

1.11.2.2 Procedure

For items that meet the Waiver Criteria specified in this Manual in Section 1.11.2.1 "Waiver Criteria", the following procedure applies:

- Waiver request
- City's review and request disposition
- Appeal

The elements of the procedure are discussed in more detail in the following subsections.

Waiver Request:
Any person may request a Waiver to a City standard by submitting a written request to the City Engineer. The written request must state the desired waiver, the reason for the waiver, and a comparison of the waiver to the existing standard. The written request shall be on the "Request for Design and Construction Standard Waiver Form", located in Appendix E, and shall include, at a minimum, the following information:

1. A completed "Request for Design and Construction Standard Waiver" form.
2. A narrative description that includes the following information for each requested waiver:
    a. State what the waiver request is and compare it to the existing City standard.
    b. State the reason for the waiver and describe how it meets the Waiver Criteria specified in this Manual in Section 1.11.2.1 "Waiver Criteria".
3. Reference any relevant industry standards or specifications that support the waiver request.

City's Review and Request Disposition:
The City will review all properly completed forms and take one of the following actions:

- Approve as requested
- Approve with noted conditions
- Deny the request

The City's response will be in writing. A conditional approval or denial of the request will be accompanied with a brief explanation. Any approved Waiver is project-specific and does not constitute a precedent for the modification of a standard.

Appeal:
An Applicant may appeal a denied Waiver request to the Planning Commission or to the AWWB, as applicable, within 30 days from the date of the City's response letter.

This page intentionally left blank.

APPENDIX A-1. Site Development Application for DRT Submittal

This page intentionally left blank.

Case #: _____

City of Auburn

SITE DEVELOPMENT APPLICATION FOR DRT SUBMITTAL

ENGINEERING SERVICES DEPARTMENT
161 North Ross Street
Auburn, AL 36830
(334) 501-7390 ~ Fax: (334) 501-7294

Applicant Name: _____ Project Name: _____

Mailing Address: _____ Site Address: _____

_____ Phone Number: _____

Engineer's Email Address: _____

Please provide any additional email addresses below, for people who should be copied on the DRT comments letter:

_____

A COPY OF THE DEED TO THE SUBJECT PROPERTY MUST BE SUBMITTED WITH THIS APPLICATION. If the applicant is not the owner, then a letter allowing the applicant to act as an "authorized agent" must be on file. All associated fees will be charged to the applicant unless otherwise arranged.

General Location: _____

Gross Area of Subject Property: _____ Number of Individual Units (If residential): _____

Current Use: _____ Current Zoning District: _____

Proposed Use: _____

Is the proposed development to be on an existing lot of record? ☐ Yes ☐ No

Is the proposed development on a designated corridor? ☐ Yes ☐ No

Required Documents

For a complete list of the submittal requirements, see section 1.3.4 of the Engineering Design and Construction Manual.

DRT Submittals can be made online through the Auburn Permit Portal. The portal can be found at https://webgis.auburnalabama.org/permits.

For site development projects an approved site plan, approved engineering plans and an approved landscape plan (pursuant to regulations in Section 802.12) are required before release of the zoning certificate. Additionally, all erosion & sediment control measures and detention (if required) must be installed and approved prior to release of the zoning certificate.

I, the applicant, certify that all of the above facts are true and correct to the best of my knowledge. I understand that any development approval(s) granted pursuant to this application shall be subject to all applicable regulations of the City of Auburn, and that such approval(s) shall expire unless construction has commenced within eighteen (18) months following date of approval.

Applicant's Signature:	Date:
Applicant's Name (Please print):	

---------- *FOR OFFICE USE ONLY* ----------

Received By:	**Date:**
Submittal Approved? Yes ☐ No ☐	**Comment (if rejected):**
DRT Meeting Date:	

This page intentionally left blank.

APPENDIX A-2. Subdivision Application for DRT Submittal

This page intentionally left blank.

Case #: _____

City of Auburn

SUBDIVISION APPLICATION FOR DRT SUBMITTAL

ENGINEERING SERVICES DEPARTMENT
161 North Ross Street
Auburn, AL 36830
(334) 501-7390 ~ Fax: (334) 501-7294

Applicant Name: _____ Project Name: _____

Mailing Address: _____ Site Address: _____

_____ Phone Number: _____

Engineer's Email Address: _____

Please provide any additional email addresses below, for people who should be copied on the DRT comments letter:

_____

A COPY OF THE DEED TO THE SUBJECT PROPERTY MUST BE SUBMITTED WITH THIS APPLICATION. If the applicant is not the owner, then a letter allowing the applicant to act as an "authorized agent" must be on file. All associated fees will be charged to the applicant unless otherwise arranged.

General Location: _____

Gross Area of Subject Property: _____ Number of Individual Lots: _____

Current Zoning District: _____ Will this be developed as *Performance*? ☐ Yes ☐ No

Will this development require Lee County review? ☐ Yes ☐ No

Has a Preliminary Plat Been Approved? ☐ Yes ☐ No

Has the Preliminary Plat changed since it was approved by the Planning Commission? ☐ Yes ☐ No

If yes, describe the changes: _____

_____

Required Documents

For a complete list of the submittal requirements, see section 1.3.4 of the Engineering Design and Construction Manual.

DRT Submittals can be made online through the Auburn Permit Portal. The portal can be found at https://webgis.auburnalabama.org/permits.

I, the applicant, certify that all of the above facts are true and correct to the best of my knowledge. I understand that any development approval(s) granted pursuant to this application shall be subject to all applicable regulations of the City of Auburn, and that such approval(s) shall expire unless construction has commenced within eighteen (18) months following date of approval.

Applicant's Signature:	Date:
Applicant's Name (Please print):	

---------- *FOR OFFICE USE ONLY* ----------

Received By:	**Date:**
Submittal Approved? Yes ☐ No ☐	**Comment (if rejected):**
DRT Meeting Date:	

This page intentionally left blank.

APPENDIX B-1. Site Development Plans Engineering Checklist

This page intentionally left blank.

DRT Checklist for *Site Development* Construction Plans

City of Auburn

Project Name: _____ **DRT Case No:** _____

This checklist must be submitted with every set of engineering construction plans for site developents (conditional & permitted use projects). All items on the checklist shall be addressed. If the item is not applicable to this project check the box next to the item labeled "N/A", and provide comment. Items preceded by an asterisk (*) are required for the submittal to be considered complete. If one of these items is missing from the submittal without a valid explanation, the entire submittal will be rejected. Note that this checklist is not intended to be all-inclusive, and fulfillment of this checklist does not alleviate the obligation of the designer to meet all City of Auburn code, regulations, ordinances, and specifications. The purpose of this checklist is to facilitate a more efficient plan review process for the designer and the review team.

	Description	Check	N/A	Comments
	Required Plan Sheets			
	These are the basic sheets we expect to see in a set of plans. Some sheets may be combined on certain projects, or have different names (for example, water and sewer shown on one utility plan sheet for small projects).			
*	Title/Cover Sheet			
*	Project Notes			
*	Existing Conditions/Demo Plan			
*	Site Plan (engineering)			
*	Water Plan			
*	Sanitary Sewer Plan			
*	Sanitary Sewer Profiles (for public infrastructure)			
*	Grading & Drainage Plan			
*	Storm Sewer Profiles (for public infrastructure)			
*	Erosion & Sediment Control Plan (typically 3 phases)			
*	Street Plan & Profiles (for public infrastrucutre)			
*	Miscellaneous Details, Cross-sections & Other Sheets			
*	City of Auburn Standard Details			
	Title Sheet			
TITLE SHEET - TITLE SHEE	Project Title			
	Permit Numbers (USACE & ADEM)			
	Relevant Contact Information			
	Sheet Index			
	Vicinity Map (legible)			
	Engineer's Seal			
	Project Notes			
NOTES	Verify that project notes do not conflict with City of Auburn specifications			
	Provide Legend			
	Existing Conditions / Demo Plan			
DEMO---DEMO---DEMO---DEMO---DEMO---D	Include North arrow			
	Show locations of existing structures			
	Indicate if structures are being removed			
	Show existing topography with clearly labeled contours lines			
	Minimum 2ft contour intervals with every 10ft line labeled			
	Show existing water features including wetland areas			
	Show existing easements and right-of-ways			
	Show existing utilities			
	Indicate if being removed/abandoned			
	Show all property lines			
	Show the limits of clearing & grubbing			
	Site Plan (engineering)			
SITE PLAN - SITE PLAN	Show property lines, building layout, pavement, traffic/parking striping,			
	traffic signs, etc.			
	Indicate parking dimensions, lane widths, and corner radii			
	Show dumpster location			
	Verfiy Planning Commission resolutions have been met for Conditional Uses			
	Water Plans			
----W-----W-----W-----V	*Required water service submittals prior to or with plan submittal:			
	Development Application for Water and Sewer Service			
	Backflow Protection Information Sheet			
	Fire flow calculations, when applicable (coordinate with WRM Department)			
	Include North arrow			
	If water layout requires multiple pages, include an overall plan sheet			

Description	Check	N/A	Comments
The following **existing** water infrastructure should be shown:			
Location, size, and material of all water mains and service lines			
Location and size of all water meters			
Location of the nearest main line valves for isolation of the site			
Location of the nearest fire hydrants			
Location of all blow-off valves and air release valves			
The following **proposed** water infrastructure should be shown:			
Location, size, and material of all water mains and service lines			
Location and size of all water meters (place at edge of ROW or easement)			
Location of all isolation valves, blow-off valves, and air release valves			
Location of all fire hydrants			
Location of FDC within 125 ft of a fire hydrant			
Location of all backflow prevention devices, and vaults			
Location of all bends, tees, and fittings (specify type and degree)			
Location and detail of all necessary thrust restraint			
Location of vault drain to grade or to storm sewer			
Show all existing and proposed easements			
Provide a general layout of other utilities (existing and proposed)			
Clearly differentiate between existing and proposed utilities			
Detail all main line connections. Show tap configuration and fittings.			
Provide backflow prevention for all main line connections			
Provide estimated static pressure (normally 820 - FFE / 2.31)			
Use pressure reducing valves where static pressure > 70 psi			
Size pipes to maintain a velocity not to exceed 10 ft/sec			
Provide minimum cover of 30 inches for lines 8 inches and smaller			
Provide minimum cover of 36 inches for lines larger than 8 inches			
Provide minimum 18 inches vertical separation where water & sewer cross			
Provide minimum 10 feet horizontal separation between water & sewer lines			
Provide sprinkler count			
Provide the following notes where applicable:			
"Existing services to be abandoned shall be terminated at the main."			
"Notify AWWB of any scheduled outages 7 days prior to the outage."			
"Only AWWB personnel are authorized to operate AWWB valves."			
Sanitary Sewer Plans			
*Required sewer service submittals prior to or with plan submittal:			
Development Application for Water and Sewer Service			
Grease Trap Sizing Worksheet			
Approved pump station design (coordinate with the WRM Department)			
Include North arrow			
If sewer layout requires multiple pages, include an overall plan sheet			
Show all existing and proposed easements			
Provide a general layout of other utilities (existing and proposed)			
The following **existing** sewer infrastructure should be shown:			
Location of all manholes with rim, and all invert elevations provided			
Location, sizes, materials, and slopes of all sewer mains and laterals			
Location, and size of grease traps and/or oil & grit separators			
The following **proposed** sewer infrastructure should be shown:			
Location of all manholes with rim, and all invert elevations provided			
Location, sizes, materials, and slopes of all sewer mains and laterals			
Location and size of grease traps where required			
Location and size of oil & grit separators where required			
Location of cleanouts at the edge of ROW or easement			
Clearly differentiate between existing and proposed utilities			
Label all manholes and pipes (correspond with labels on profile sheets)			
Provide contours or specify finish floor elevations			
Indicate how existing sewer mains or services are to be abandoned			
Manholes shall be locked down if less than 1 foot above the 100-yr BFE			
Public sanitary sewer main requirements:			
Manholes shall be located in the center of the street where possible			
Design sewer lines for maximum capacity at half full			
DIP required where cover is greater than 12 feet or less than 3 feet			
DIP required where less than 2 feet of clearance between utilities			
DIP required within the 100-yr BFE or where bouyancy is a concern			

Description	Check	N/A	Comments
Provide consistent pipe material between manholes			
Minimum slope requirements:			
4"=2%, 6"=1%, 8"=0.60%, 10"=0.35%, 12"=0.30%			
Provide a minimum 0.10' drop across all straight through manholes			
Provide a minimum 0.25' drop across all turning manholes			
Manhole spacing should not exceed 400 feet			
Services tied into mains shall have a 3 feet minimum separation			
Service lines should connect to manholes where possible			
Use standard 4 inch drop for service lines into manholes			
Service lines angled against the flow use a minimum 6 inch drop			
If angle against the flow >135 degrees connect lateral directly to main			
No more than four laterals connected to a pass through manhole			
No more than five laterals connected to a beginning manhole			
Cleanouts to be located in traffic rated enclosure in paved areas			
Backflow prevention is required when any sewered portion of a building is less than 12 inches above the rim elevation of the nearest **upstream** manhole.			
Such lots shall be identified on the plans and the plat.			
Sanitary Sewer Pipe Profiles			
Indicate pipe material, size, slope and length			
Show all utility crossings			
Show existing and proposed grades			
Show all rim and invert elevations			
Show outside drop manhole where drop is 2 feet or greater			
Label all manholes and pipes (correspond with labels on plan sheets)			
Show existing mains and structures at all connection points			
Clearly differentiate between existing and proposed utilities			
Clearly differentiate between material types			
Grading & Drainage Plans			
Include North arrow			
If plans require multiple pages, include at least one overall plan sheet			
Show existing topographic contours			
Maximum 2ft contour intervals with every 10ft line labeled			
Used lighter or dashed line type for existing contour lines			
Show proposed contours			
Maximum 2ft contour intervals with every 10ft line labeled			
Proposed contour lines shoud tie-in to existing contour lines			
Show streams and other water features			
Show stream & wetland buffers			
Show 100-yr flood plain boundaries			
Indicate minimum FFE's for lots adjacent to water features			
Show all existing structures, utilities, and easements that will remain			
Show mitigation areas			
Indicate steep slopes (City of Auburn Zoning Ordinance)			
Show curb & gutter (2ft City of Auburn Std. C&G)			
Show all storm water inlets			
Max access spacing 500ft for 15in to 48in pipe (for public infrastrcture)			
Max access spacing 800ft for 54in or greater (for public infrastructure)			
Double-wing inlets only used in sags (for public infrastructure)			
Show all proposed culverts			
Indicate type and dimensions			
Show headwalls and energy dissipaters			
Show all storm sewer pipe			
Show headwalls at discharge points			
Show all manholes and junction boxes			
Extend discharge points at least 10 ft beyond building lines			
Show rip-rap or other energy dissipators at discharge points			
Show all proposed drainage & utility easement			
Show detention system(s)			
Fencing required around ponds for slopes steeper than 3:1			
Pipes discharge at bottom of pond slopes			
Show outlet structure(s)			
Storm Water Pipe Profiles (for public infrastructure only)			
Indicate pipe size, material, slope and length			

	Description	Check	N/A	Comments
SD PROFILES	Pipe beneath streets shall be RCP			
	Show rim & invert elevations			
	Show 25-yr Hydraulic Grade Line			
	Show existing and proposed grades			
	Show all other utility crossings			
	Show existing pipe & structures at tie-ins			
Erosion & Sediment Control Plans				
ESC	Used a phased plan when applicable			
	Show clearing limits			
	Show stream & wetland buffers. Drainage basin of stream should be delineated from the commencement point of the stream, to the point that it leaves the property. Basin area determines buffer widths (see ZO)			
	Provide an ES&C legend			
	Identify project sign location and provide on-site project rain gauge			
	Silt fencing shall be Class "A" (wire reinforced, metal staked, trenched), C-POP, or approved equal.			
	Construction Entrance Pad (min 20ft x 50ft) Use #1 stone with geotextile fabric underneath. One CEP per site at any given time.			
	Hay bales may not be used as stand-alone inlet protection. They can be used in conjunction with silt fence, silt savers, etc			
	Use rock check dams, wattles, or silt fence check dams (rather than hay bales) where applicable.			
	Design and show outlet protection at all discharges			
	Show curb inlet protection devices (no stand-alone hay bales)			
	Slopes greater than 3:1 require erosion control blankets. Specify types of blankets being used.			
	Show all sediment basin locations, filter structures, and sediment volumes			
	*Submit sediment storage calculations			
	Attach City of Auburn standard erosion & sedimentation ctrl. details			
	Water Quality Forms Submittted			
	Low Impact Development/Green Infrastructure Forms Submitted			
	Include the following notes on the E&SC Plans[1]			
Street Plan & Profiles (for public infrastructure only)				
PLAN & PROFILE / PLAN & PROFILE / PLAN & PROFILE / PLAN & PROFILE / PLAN & PROFILE	**Plan view**			
	Include North arrow			
	Show existing and proposed topography			
	Show edge of pavement and curb/gutter			
	Show ROW & easements			
	Show station line			
	Show horizontal curve radii			
	Show deceleration lane storage, taper, and transition lengths			
	Indicate tangent lengths (minimum 100ft between curves)			
	Indicate street width (b/c to b/c)			
	Indicate intersection corner property line radii (minimum 20ft)			
	Show proposed sidewalks			
	Profile View			
	Show existing and proposed centerline grades			
	Max grade for local streets = 15%			
	Max grade for collector streets = 12%			
	Max grade for minor arterial = 8%			
	Max grade = 5% within 100ft of intersection			
	Show vertical alignment with all vertical curve data			
	Indicate the design speed used (see Engineering Design & Const. Manual)			
	Align stationing with the plan view station line			
Miscellaneous Details, Cross-sections, & Other Sheets				
MISC	Collector or arterial (or other special) striping			
	Show details for improvements to off-site infrastructure			
	Turn lanes - including buildup and striping (meet with City on widening)			
	Off-site sewer, water, or storm water improvements			
	Detention outlet control structure details			
	Culvert details			
	HDPE installation details (for public infrastrucutre)			
	Tail ditch and/or swale details			

	Description	Check	N/A	Comments
MISC ---	Traffic control plan and detour plan			
	Proposed street classifications & buildups (for public infrastrucutre)			
City of Auburn Standard Details				
	Include all relevant City of Auburn standard details with the final plans			
Miscellaneous Design & Submittal Requirements				
MISC --- MISC --- MISC --- MISC --- MISC --- MISC --- MISC --- MISC ---	The following shall be included with the initial DRT submittal, when applicable:			
	1. Electrical plans for required pedestrian lighting			
	2. Traffic Impact Study			
	3. Sight distance analyses			
	4. Design standards waiver requests			
	No trees shall be within 10ft of center lines of utilities			
	The following note should be added to all utility plans and plats[2]			
	Easements shall be the greater of 20ft or 2 times the depth to the bottom of the utility. Easement widths shall be in increments of 10ft.			
	Slope and grades of easements shall be passable by vehicles (maximum easement cross slope of 4:1)			
	All topography should be relative to MSL (no assumed datum)			
	Utility stub outs for future development should be placed in easements extending to the edge of the property line			
	There are no points of storm water discharge from the property that exceed the pre-develoment conditions at those points			

[1]

a. Any area that has been disturbed and will remain so for more than 13 days shall be seeded and mulched within 5 days of being disturbed.
b. Additional BMPs may be required by the QCP and/or City of Auburn over the course of the project to minimize sediment release from the site.
c. All BMPs shall be designed and installed in accordance with the Alabama Handbook for Erosion Control, Sediment Control, and Stormwater Management on Construction Sites and Urban Areas and the City of Auburn standard erosion and sediment control details.
d. The use of floc-blocks, polyacrylamide (PAM), or other settling enhancement materials may be required by the QCP or City of Auburn during the course of construction to minimize turbidity and sediment release from the site.
e. Remove all temporary BMPs upon submittal of Notice Of Termination to ADEM.

[2]

a. No permanent structures may be constructed or placed on easements.
b. Fences may be erected perpendicularly across the easement provided there is a minimum 12-foot wide access gate installed. If the gate is to be locked there must be a City-approved lock installed in conjunction with the owners lock.
c. No canopy trees shall be planted within 10 feet of public water or sewer lines.

SIGNED: _____
(engineer of record)

This page intentionally left blank.

APPENDIX B-2. Subdivision Construction Plans Engineering Checklist

This page intentionally left blank.

DRT Checklist for *Subdivision* Construction Plans

Project Name: _____ **DRT Case No:** _____

City of Auburn

This checklist must be submitted with every set of engineering construction plans for subdivision improvements. All items on the checklist shall be addressed. If the item is not applicable to this project check the box next to the item labeled "N/A", and provide comment. Items preceded by an asterisk (*) are required for the submittal to be considered complete. If one of these items is missing from the submittal without a valid explanation, the entire submittal will be rejected. Note that this checklist is not intended to be all-inclusive, and fulfillment of this checklist does not alleviate the obligation of the designer to meet all City of Auburn code, regulations, ordinances, and specifications. The purpose of this checklist is to facilitate a more efficient plan review process for the designer and the review team.

	Description	Check	N/A	Comments
	Required Plan Sheets			
	These are the basic sheets we expect to see in a set of plans. Some sheets may be combined on certain projects, or have different names (for example, storm water profiles shown on the street plan & profile sheets).			
*	Title/Cover Sheet			
*	Project Notes			
*	Existing Conditions/Demo Plan			
*	Preliminary Plat			
*	Water Plan			
*	Sanitary Sewer Plan			
*	Sanitary Sewer Profiles			
*	Grading & Drainage Plan			
*	Storm Sewer Profiles			
*	Erosion & Sediment Control Plan (typically 3 phases)			
*	Street Plan & Profiles			
*	Miscellaneous Details, Cross-sections & Other Sheets			
*	City of Auburn Standard Details			
	Title Sheet			
TITLE SHEET - TITLE SHEE	Project Title			
	Permit Numbers (USACE & ADEM)			
	Relevant Contact Information			
	Sheet Index			
	Vicinity Map (legible)			
	Engineer's Seal			
	Project Notes			
NOTES	Verify that project notes do not conflict with City of Auburn specifications			
	Provide Legend			
	Existing Conditions / Demo Plan			
DEMO---DEMO---DEMO---DEMO---DEMO---DI	Include North arrow			
	Show locations of existing structures			
	Indicate if structures are being removed			
	Show existing topography with clearly labeled contours lines			
	Minimum 2ft contour intervals with every 10ft line labeled			
	Show existing water features including wetland areas			
	Show existing easements and right-of-ways			
	Show existing utilities			
	Indicate if being removed/abandoned			
	Show all property lines			
	Show the limits of clearing & grubbing			
	Preliminary Plat			
PLAT - PLAT -	Include a copy of the approved Preliminary Plat			
	Indicate any changes from the approved plat			
	Verify planning commission resolutions were addressed			
	Water Plans			
--W-----W-----W-----W-----W	*Required water service submittals prior to or with plan submittal:			
	Development Application for Water and Sewer Service			
	Backflow Protection Information Sheet			
	Fire flow calculations, when applicable (coordinate with WRM Department)			
	Include North arrow			
	If water layout requires multiple pages, include an overall plan sheet			
	The following **existing** water infrastructure should be shown:			
	Location, size, and material of all water mains and service lines			
	Location and size of all water meters			

Description	Check	N/A	Comments
Location of the nearest main line valves for isolation of the site			
Location of the nearest fire hydrants			
Location of all blow-off valves and air release valves			
The following **proposed** water infrastructure should be shown:			
Location, size, and material of all water mains and service lines			
Location and size of all water meters (place at edge of ROW or easement)			
Location of all isolation valves, blow-off valves, and air release valves			
Location of all fire hydrants			
Location of FDC within 125 ft of a fire hydrant			
Location of all backflow prevention devices, and vaults			
Location of all bends, tees, and fittings (specify type and degree)			
Location and detail of all necessary thrust restraint			
Location of vault drain to grade or to storm sewer			
Show all existing and proposed easements			
Provide a general layout of other utilities (existing and proposed)			
Clearly differentiate between existing and proposed utilities			
Detail all main line connections. Show tap configuration and fittings.			
Provide backflow prevention for all main line connections			
Provide estimated static pressure (normally 820 - FFE / 2.31)			
Use pressure reducing valves where static pressure > 70 psi			
Size pipes to maintain a velocity not to exceed 10 ft/sec			
Provide minimum cover of 30 inches for lines 8 inches and smaller			
Provide minimum cover of 36 inches for lines larger than 8 inches			
Provide minimum 18 inches vertical separation where water & sewer cross			
Provide minimum 10 feet horizontal separation between water & sewer lines			
Provide sprinkler count			
Provide the following notes where applicable:			
"Existing services to be abandoned shall be terminated at the main."			
"Notify AWWB of any scheduled outages 7 days prior to the outage."			
"Only AWWB personnel are authorized to operate AWWB valves."			
Sanitary Sewer Plans			
*Required sewer service submittals prior to or with plan submittal:			
Development Application for Water and Sewer Service			
Grease Trap Sizing Worksheet			
Approved pump station design (coordinated with the WRM Department)			
Include North arrow			
The following **existing** sewer infrastructure should be shown:			
Location of all manholes with rim, and all invert elevations provided			
Location, sizes, materials, and slopes of all sewer mains and laterals			
Location, and size of grease traps and/or oil & grit separators			
The following **proposed** sewer infrastructure should be shown:			
Location of all manholes with rim, and all invert elevations provided			
Location, sizes, materials, and slopes of all sewer mains and laterals			
Location and size of grease traps where required			
Location and size of oil & grit separators where required			
Location of cleanouts at the edge of ROW or easement			
If sewer layout requires multiple pages, include an overall plan sheet			
Show all existing and proposed easements			
Provide a general layout of other utilities (existing and proposed)			
Clearly differentiate between existing and proposed utilities			
Label all manholes and pipes (correspond with labels on profile sheets)			
Provide contours or specify finish floor elevations			
Indicate how existing sewer mains or services are to be abandoned			
Manholes shall be locked down if less than 1 foot above the 100-yr BFE			
Public sanitary sewer main requirements:			
Manholes shall be located in the center of the street where possible			
Design sewer lines for maximum capacity at half full			
DIP required where cover is greater than 12 feet or less than 3 feet			
DIP required where less than 2 feet of clearance between utilities			
DIP required within the 100-yr BFE or where bouyancy is a concern			
Provide consistent pipe material between manholes			
Minimum slope requirements:			

Description	Check	N/A	Comments
4"=2%, 6"=1%, 8"=0.60%, 10"=0.35%, 12"=0.30%			
Provide a minimum 0.10' drop across all straight through manholes			
Provide a minimum 0.25' drop across all turning manholes			
Manhole spacing should not exceed 400 feet			
Services tied into mains shall have a 3 feet minimum separation			
Service lines should connect to manholes where possible			
Use standard 4 inch drop for service lines into manholes			
Service lines angled against the flow use a minimum 6 inch drop			
If angle against the flow >135 degrees connect lateral directly to main			
No more than four laterals connected to a pass through manhole			
No more than five laterals connected to a beginning manhole			
Cleanouts to be located in traffic rated enclosure in paved areas			
Backflow prevention is required when any sewered portion of a building is less than 12 inches above the rim elevation of the nearest **upstream** manhole. Such lots shall be identified on the plans and the plat.			
Sanitary Sewer Pipe Profiles			
Indicate pipe material, size, slope and length			
Show all utility crossings			
Show existing and proposed grades			
Show all rim and invert elevations			
Show outside drop manhole where drop is 2 feet or greater			
Label all manholes and pipes (correspond with labels on plan sheets)			
Show existing mains and structures at all connection points			
Clearly differentiate between existing and proposed utilities			
Clearly differentiate between material types			
Grading & Drainage Plans			
Include North arrow			
If plans require multiple pages, include at least one overall plan sheet			
Show existing topographic contours			
Maximum 2ft contour intervals with every 10ft line labeled			
Used lighter or dashed line type for existing contour lines			
Show proposed contours			
Maximum 2ft contour intervals with every 10ft line labeled			
Proposed contour lines shoud tie-in to existing contour lines			
Show streams and other water features			
Show stream & wetland buffers			
Show 100-yr flood plain boundaries			
Indicate minimum FFE's for lots adjacent to water features			
Show all existing structures, utilities, and easements that will remain			
Show mitigation areas			
Indicate steep slopes (City of Auburn Zoning Ordinance)			
Show curb & gutter (2ft City of Auburn Std. C&G)			
Show all storm water inlets			
Max access spacing 500ft for 15in to 48in pipe (for public infrastrcture)			
Max access spacing 800ft for 54in or greater (for public infrastructure)			
Double-wing inlets only used in sags (for public infrastructure)			
Show all proposed culverts			
Indicate type and dimensions			
Show headwalls and energy dissipaters			
Show all storm sewer pipe			
Show headwalls at discharge points			
Show all manholes and junction boxes			
Extend discharge points at least 10 ft beyond building lines			
Show rip-rap or other energy dissipators at discharge points			
Show all proposed drainage & utility easement			
Show detention system(s)			
Fencing required around ponds for slopes steeper than 3:1			
Pipes discharge at bottom of pond slopes			
Show outlet structure(s)			
Storm Water Pipe Profiles (for public infrastructure only)			
Indicate pipe size, material, slope and length			
Pipe beneath streets shall be RCP			

	Description	Check	N/A	Comments
SD PROFILES SD PR	Show rim & invert elevations			
	Show 25-yr Hydraulic Grade Line			
	Show existing and proposed grades			
	Show all other utility crossings			
	Show existing pipe & structures at tie-ins			
Erosion & Sediment Control Plans				
ESC---ESC---ESC---ESC---ESC---ESC---ESC---ESC---ESC---ESC---ESC---ESC---ESC---ESC---ESC---ESC---ESC---	Used a phased plan when applicable			
	Show clearing limits			
	Show stream & wetland buffers. Drainage basin of stream should be delineated from the commencement point of the stream, to the point that it leaves the property. Basin area determines buffer widths (see ZO)			
	Provide an ES&C legend			
	Identify project sign location and provide project rain gauge on site			
	All silt fencing shall be Class "A" (wire reinforced, metal staked, trenched), C-POP, or approved equal			
	Construction Entrance Pad (min 20ft x 50ft) Use #1 stone with geotextile fabric underneath. One CEP per site at any given time.			
	Hay bales may not be used as stand-alone inlet protection. They can be used in conjunction with silt fence, silt savers, etc			
	Use rock check dams, wattles, or silt fence check dams (rather than hay bales) where applicable.			
	Design and show outlet protection at all discharges			
	Show curb inlet protection devices (no stand-alone hay bales)			
	Slopes greater than 3:1 require erosion control blankets. Specify types of blankets being used.			
	Show all sediment basin locations, filter structures, and sediment volumes			
	*Submit sediment storage calculations			
	Attach City of Auburn standard erosion & sedimentation ctrl. details			
	Water Quality Forms Submittted			
	Low Impact Development/Green Infrastructure Forms Submitted			
	Include the following notes on the E&SC Plans[1]			
Street Plan & Profiles (for public infrastructure only)				
PLAN & PROFILE / PLAN & PROFILE / PLAN & PROFILE / PLAN & PROFILE / PLAN & PR	**Plan view**			
	Include North arrow			
	Show existing and proposed topography			
	Show edge of pavement and curb/gutter			
	Show ROW & easements			
	Show station line			
	Show horizontal curve radii			
	Show deceleration lane storage, taper, and transition lengths			
	Indicate tangent lengths (minimum 100ft between curves)			
	Indicate street width (b/c to b/c)			
	Indicate intersection corner property line radii (minimum 20ft)			
	Show proposed sidewalks			
	Profile View			
	Show existing and proposed centerline grades			
	Max grade for local streets = 15%			
	Max grade for collector streets = 12%			
	Max grade for minor arterial = 8%			
	Max grade = 5% within 100ft of intersection			
	Show vertical alignment with all vertical curve data			
	Indicate the design speed used (see Engineering Design & Const. Manual)			
	Align stationing with the plan view station line			
Miscellaneous Details, Cross-sections, & Other Sheets				
MISC --- MISC --- MISC --- MISC -	Collector or arterial (or other special) striping			
	Show details for improvements to off-site infrastructure			
	Turn lanes - including buildup and striping (meet with City on widening)			
	Off-site sewer, water, or storm water improvements			
	Detention outlet control structure details			
	Culvert details			
	HDPE installation details (for public infrastructure)			
	Tail ditch and/or swale details			

	Description	Check	N/A	Comments
MISC ---	Traffic control plan and detour plan			
	Proposed street classifications & buildups (for public infrastructure)			
City of Auburn Standard Details				
	Include all relevant City of Auburn standard details with the final plans			
Miscellaneous Design & Submittal Requirements				
MISC --- MISC --- MISC --- MISC --- MISC --- MISC --- MISC --- MI	The following shall be included with the initial DRT submittal, when applicable:			
	1. Electrical plans for required pedestrian lighting			
	2. Traffic Impact Study			
	3. Sight distance analyses			
	4. Design standards waiver requests			
	No trees shall be within 10ft of center lines of utilities			
	The following note should be added to all utility plans and plats[2]			
	Easements shall be the greater of 20ft or 2 times the depth to the bottom			
	of the utility. Easement widths shall be in increments of 10ft.			
	Slope and grades of easements shall be passable by vehicles			
	(maximum easement cross slope of 4:1)			
	All topography should be relative to MSL (no assumed datum)			
	Utility stub outs for future development should be placed in easements			
	extending to the edge of the property line			
	There are no points of storm water discharge from the property that exceed			
	the pre-develoment conditions at those points			

[1]

a. Any area that has been disturbed and will remain so for more than 13 days shall be seeded and mulched within 5 days of being disturbed.
b. Additional BMPs may be required by the QCP and/or City of Auburn over the course of the project to minimize sediment release from the site.
c. All BMPs shall be designed and installed in accordance with the Alabama Handbook for Erosion Control, Sediment Control, and Stormwater Management on Construction Sites and Urban Areas and the City of Auburn standard erosion and sediment control details.
d. The use of floc-blocks, polyacrylamide (PAM), or other settling enhancement materials may be required by the QCP or City of Auburn during the course of construction to minimize turbidity and sediment release from the site.
e. Remove all temporary BMPs upon submittal of Notice Of Termination to ADEM.
f. Any dewatering operation must be properly filtered prior to discharge.

[2]

a. No permanent structures may be constructed or placed on easements.
b. Fences may be erected perpendicularly across the easement provided there is a minimum 12-foot wide access gate installed. If the gate is to be locked there must be a City-approved lock installed in conjunction with the owners lock.
c. No canopy trees shall be planted within 10 feet of public water or sewer lines.

SIGNED: _____

(engineer of record)

This page intentionally left blank.

APPENDIX B-3. Site Plan Sufficiency Checklist

This page intentionally left blank.

City of Auburn

SITE PLAN SUFFICIENY CHECKLIST
PLANNING DEPARTMENT
FOR THE DEVELOPMENT REVIEW TEAM SUBMITTAL

Case #_____

Please check boxes to indicate the required item has been addressed or mark "N/A", if appropriate.

REQUIRED

Table format:		**Graphic information:**	
	Zoning and Current Land Use of adjacent properties		**Vicinity map**, north arrow, seal, (Name, address & Phone number of surveyor), date prepared and graphic scale
	Impervious surface area in square feet, Impervious surface ratio (calculated) Maximum and proposed		**Certified boundary survey** of the tract prepared by a registered surveyor, indicating an existing lot of record
	Floor area in square feet, Floor area ratio (calculated) Maximum and proposed		Location, height and **dimensions of all structures**
	Number of floors or stories, **height** of all structures		Location of all **impervious surfaces**
	Type(s) of **bufferyard** required, if any, Along each property boundary and width		Location and dimensions of all required **bufferyards**
	Number of **parking spaces** Required and proposed (calculated) based on Section 502 or 509 requirements		Areas of **general landscaping** pursuant to Section 426 / Areas of **landscaping for off-street parking areas** pursuant to Sections 426 and 433
	Corridor Overlay Information where applicable (building materials, sign, lighting etc) *Site plans subject to Corridor Overlay requirements must submit **elevations**		Locations and dimensions of all **parking spaces, loading berths, and driveway aisles**. One-way aisles must be labeled as such
			Location of all **curb cuts** and their **distances from nearest adjacent curb cuts or street intersections**
			Phase lines, if the development is to be constructed in phases
			Location and screening of **solid waste receptacles**

This page intentionally left blank.

APPENDIX B-4. Drainage Checklist

This page intentionally left blank.

Stormwater Drainage Checklist

Engineering Services Department
161 North Ross Street
Auburn, Alabama 36830 (334) 501-7390 FAX (334) 501-7294
https://www.auburnalabama.org/engineering-services/

This checklist shall be submitted as part of the DRT submittal package for all projects that require stormwater detention. It shall be included as the first page of the drainage report, and be signed/sealed by an engineer registered in the state of Alabama.

Description	Checked	N/A	Comments
Drainage report stamped by AL engineer			
Description of existing drainage conditions, including existing infrastructure, land use, wetlands, floodplains, etc., included in report			
Basin maps included for pre- and post-development conditions			
Sub-basins & outfalls clearly identified on basin maps			
Post-development rate of discharge does not exceed pre-development discharge rate at all analysis points			
Post-development routing summary presented in tabular format			
Pre-Development Conditions worksheet included for each sub-basin			
Post-Development Conditions worksheet included for each analysis point			
Point of Analysis Peak Discharge Summary table included			
Total Peak Discharge Summary table included			
Gutter Spread Table completed and included			
Pipe Design Table completed and included			
Hydraulic grade line shown on pipe profiles and/or swale cross-sections			
“No adverse impact” statement (for downstream infrastructure) included in report			

Project Name: _____

Date: _____

Engineer’s Signature: _____ Engineer’s Seal:

This page intentionally left blank.

Gutter Spread Table

Inlet ID	Gutter Flow (cfs)	Roadway Slope at Inlet (%)	Spread @ Inlet (ft)	Inlet Efficiency (%)	Bypass Flow (cfs)	Inlet ID Accepting Bypass

Pipe Design Table

Pipe ID	Pipe Size (in)	Pipe Slope (%)	Pipe Flow (cfs)	Full Flow Capacity (cfs)	Full Flow Velocity (fps)	Design Velocity (fps)

PRE-DEVELOPMENT CONDITIONS

Project Name: _____

Total Project Area (acres): _____

Comparison Point Name/Number: _____

Basin/Sub-Basin Area (acres): _____

	2 year storm	5 year storm	10 year storm	25 year storm	100 year storm
Curve Number or Runoff Coefficient					
Time of Concentration (min)					
Peak Flow (cfs)					

1- Use separate sheet for each comparison point that is used for stormwater calculations
2- Provide documentation for composite curve numbers or runoff coefficients
3- Provide documentation for time of concentration calculations
4- Provide documentation on calcualtions and method used to determine peak flow

Revised November 2011

POST-DEVELOPMENT CONDITIONS

Project Name: _____

Total Project Area (acres): _____

Comparison Point Name/Number: _____

Basin/Sub-Basin Area (acres): _____

Receiving Facility/Pond: _____

	2 year storm	5 year storm	10 year storm	25 year storm	100 year storm
Curve Number or Runoff Coefficient					
Time of Concentration (min)					
Peak Flow (cfs)					

1- Use separate sheet for each comparison point that is used for stormwater calculations
2- Indicate name of detention pond receiving runoff or bypass as appropriate
3- Provide documentation for composite curve numbers or runoff coefficients
4- Provide documentation for time of concentration calculations
5- Provide documentation on calcualtions and method used to determine peak flow

Revised November 2011

COMPARISON POINT PEAK DISCHARGE SUMMARY

Project Name: _____

Comparison Point Name/Number: _____

Return Period	Pre- Development Flow (Q cfs)	Post-Development Flow (Q cfs)	Delta Q (cfs)	% Increase (Q)
2				
5				
10				
25				
100				

Revised November 2011

TOTAL PEAK DISCHARGE SUMMARY

Project Name: _____

Return Period	Pre- Development Flow (Q cfs)	Post-Development Flow (Q cfs)	Delta Q (cfs)	% Increase (Q)
2				
5				
10				
25				
100				

Revised November 2011

APPENDIX B-5. Signature Bond for Development

This page intentionally left blank.

STATE OF ALABAMA

LEE COUNTY

City of Auburn

Signature Bond for Development

KNOW ALL MEN BY THESE PRESENTS, THAT WE _____ (hereinafter called the Principal) having received approval from the City of Auburn to construct the development know as _____ , are held firmly unto the City of Auburn, Alabama (hereinafter called the Obligee), in full and just sum of the complete cost to repair or replace any and all infrastructure removed or damaged or displaced in the event we are unable to complete the project within a reasonable amount of time or if we declare bankruptcy or insolvency before completing the project.

NOW THEREFORE, THE CONDITION OF THIS OBLIGATION IS SUCH THAT, if Principal shall promptly and faithfully construct the improvements in accordance with the approved construction plans which are made a part hereof by reference as if set out in here full, and said construction approved by Obligee, within a reasonable amount of time, then this agreement shall be null and void; otherwise to remain in full force and effect.

This agreement shall be binding on ourselves, our heirs, administrators, executors and assigns, jointly and severally and shall run with the land, firmly by these presents.

SIGNED, SEALED, AND DELIVERED THIS _____ day of _____ , _____

_____
OWNER

_____
Owner's Agent

_____
Address

_____
City, State

_____
Telephone Number

_____
Witness to Agent's Signature:

(Seal)

ATTEST:

Note: This document must be filed in the Probate record after execution.

This page intentionally left blank.

APPENDIX C. Hold Harmless Agreement

This page intentionally left blank.

INDEMNITY AND HOLD HARMLESS AGREEMENT

STATE OF ALABAMA

LEE COUNTY

WHEREAS, the City of Auburn, Alabama (hereinafter the "City") has a drainage and utility easement located along _____
_____ in Auburn, Alabama, and
(Right of way or location description)

WHEREAS, _____ (hereinafter the "Owner") of property described as _____
_____, Auburn, Alabama, wishes to locate _____ (hereinafter the "Obstruction") on the City's drainage and utility easement (shown by Exhibit A attached), and as a condition and obligation to the City for the granting of its consent to the Obstruction, the Owner, for itself and its successors in the ownership of the property on which Obstruction is located, has agreed to indemnify and hold harmless the City and holders of any interest in the easement where the Obstruction is located.

NOW, THEREFORE, in consideration of the granting of the consent of the undersigned to the placement of the Obstruction on and under the drainage and utility easement, the Owner does, for itself and its successors in the ownership of the property described, agree to indemnify, hold harmless and defend the City, its officials, representatives, agents, servants and employees from and against all liability and loss which the City and the holders of the interest in the drainage and utility easement on which the Obstruction is located may sustain as the result of claims, demands, costs or judgments arising out of the location of the Obstruction on the drainage and utility easement, including its reasonable costs in defending against any such claims. For the same consideration, the Owner agrees to release and discharge the City and The Water Works Board of the City of Auburn, Alabama from any damages to the Obstruction arising from utility maintenance work within the easement. The obligations of this indemnity shall be binding upon the successors and assigns of the Owner and shall be a covenant running with the land and shall be binding upon all future owners of the property on which the easement is located.

[Remainder of page intentionally left blank]

EXECUTED this the _____ day of _____, 20__.

_____
Owner

By: _____
Its _____

CITY OF AUBURN, ALABAMA

By: _____
Its _____

THE WATER WORKS BOARD OF THE
CITY OF AUBURN, ALABAMA

By: _____
Its _____

STATE OF ALABAMA

LEE COUNTY

I, the undersigned authority, a Notary Public in and for said County, in said State, hereby certify that _____, whose name is signed to the foregoing instrument, on behalf of the Owner, and who is known to me, acknowledged before me on this date that, being informed of the contents of the foregoing document, he/she executed the same voluntarily on the day the same bears date.

Given under my hand and official seal this the _____ day of _____, 20___.

_____
Notary Public
Commission Expires _____

STATE OF ALABAMA

LEE COUNTY

I, the undersigned authority, a Notary Public in and for said County, in said State, hereby certify that _____, whose name is signed to the foregoing instrument, on behalf of the City of Auburn, Alabama, and who is known to me, acknowledged before me on this date that, being informed of the contents of the foregoing document, he/she executed the same voluntarily on the day the same bears date.

Given under my hand and official seal this the _____ day of _____, 20___.

_____
Notary Public
Commission Expires _____

STATE OF ALABAMA

LEE COUNTY

I, the undersigned authority, a Notary Public in and for said County, in said State, hereby certify that _____, whose name is signed to the foregoing instrument, on behalf of The Water Works Board of the City of Auburn, Alabama, and who is known to me, acknowledged before me on this date that, being informed of the contents of the foregoing document, he/she executed the same voluntarily on the day the same bears date.

Given under my hand and official seal this the _____ day of _____, 20___.

_____
Notary Public
Commission Expires _____

This page intentionally left blank.

APPENDIX D. Easement Encroachment Agreement

This page intentionally left blank.

STATE OF ALABAMA)
) **LICENSE AGREEMENT**
COUNTY OF LEE)

This Agreement made and entered into on this the_____day of_____,

by and between The City of Auburn, Alabama, a municipal corporation, hereinafter referred to as "Licensor" and_____,

hereinafter referred to as "Licensee."

STATEMENT OF BACKGROUND INFORMATION

1. The City of Auburn, Alabama is the owner of that certain drainage and utility easement from_____,

dated_____, and recorded in the Office of the Judge of Probate of Lee County, Alabama in

_____.

2. Licensee has requested that it be permitted to construct and install its _____and associated appurtenances within said easement, being further described on that certain map marked "Exhibit A", attached hereto and made a part hereof by reference, and in consideration thereof has agreed to indemnify and hold harmless Licensor from any and all damages caused by its use of said easement. Licensee agrees to restore the drainage and utility easement to preconstruction conditions or better.

STATEMENT OF AGREEMENT

NOW, THEREFORE, for and in consideration of the above recitations and the mutual covenants and agreements contained herein, the parties do hereby agree as follows:

1. Licensee is hereby granted a revocable license or permit to install within the boundaries of the above-described easement its _____ and associated appurtenances in accordance with plans and specifications approved by the Licensor and at a location agreed upon by Licensor.

2. Licensee does hereby indemnify and hold harmless Licensor for any and all claims, damages and liability incurred by Licensor as a result of Licensee's _____and associated appurtenances being located within said easement and shall further be responsible for the payment or reimbursement of all defense costs, including, but not limited to, attorneys' fees which result from the same.

3. Licensor may terminate this Agreement at any time by giving to Licensee sixty (60) days written notice thereafter to so terminate this license in which case Licensee shall remove its_____and associated appurtenances as soon as practical thereafter at no expense to the Licensor.

IN WITNESS WHEREOF, the parties have executed this License Agreement on the date first written above.

THE CITY OF AUBURN, ALABAMA,
A MUNICIPAL CORPORATION,

BY: _____
ITS: Mayor

ATTEST:

BY: _____
ITS: City Manager

_____
LICENSEE

BY:_____(L.S.)

ITS:_____

STATE OF ALABAMA

LEE COUNTY

I, the undersigned authority, a Notary Public in and for said County, in said State, hereby certify that_____, whose name is signed to the foregoing instrument, and who is known to me, acknowledged before me on this date that, being informed of the contents of this document, he/she executed the same voluntarily on the day the same bears date.

Given under my hand and official seal this the___day of_____.

_____
Notary Public
Commission Expires_____

APPENDIX E-1. Request for Design and Construction Standard Waiver Form

This page intentionally left blank.

City of Auburn
Engineering Services Department
161 North Ross Street
Auburn, Alabama 36830
webengineering@auburnalabama.org

Request for Design and Construction Waiver

PROJECT INFORMATION Date: _____

Name of Project: _____ Project Address: _____

Applicant Name: _____ Telephone No.: _____

Applicant Address: _____ Applicant Firm: _____

WAIVER INFORMATION

Existing Standard

Manual Section Number and Title: _____

Brief Description of Existing Standard: _____

_____

_____

Proposed Waiver

Description of Proposed Waiver: _____

_____

_____

_____

Hardship or Justification for Waiver (See Waiver Criteria in Section 1.11.2.1): _____

_____

_____

_____

ATTACHMENTS

List all supporting documentation submitted with this form: _____

_____

_____

Note: For waivers to Standard Details, submit a hard-copy of the detail showing each proposed modification encircled with a "cloud."
For appealing a waiver denial, written application must be submitted to the Planning Commission within 30 days of the denial.

This page intentionally left blank.

APPENDIX E-2. Amendments

This page intentionally left blank.

RESOLUTION NO. 11-197

WHEREAS, the City Council of the City of Auburn approved and adopted the Public Works Design and Construction Manual on November 2, 2010 with an effective date of January 1, 2011; and,

WHEREAS, the City Engineer, in collaboration with the development community, finds it necessary to implement material changes (a copy of which is attached and made a part hereof) for clarification and to comply with rule changes in the industry and to make these changes effective immediately.

NOW THEREFORE, BE IT RESOLVED that the City Council of the City of Auburn, Alabama does hereby approve and accept the changes to the Public Works Design and Construction Manual effective immediately.

ADOPTED AND APPROVED by the City Council of the City of Auburn, Alabama, this the 15th day of November 2011.

BILL HAM, JR., Mayor

ATTEST:

CHARLES M. DUGGAN, JR., City Manager

This page intentionally left blank.

Summary of Proposed Changes to the Public Works Design & Construction Manual (PWDCM)

Table of Contents

1. Added Appendix B-6, Signature Bond for Development. The Signature Bond was referenced but no formal document was included in the manual.
2. Added Appendix E-2, Amendment Number 1. As the PW Manual is amended, copies of the resolution, changes, and effective date will become a part of the manual.

Section 1 – General Information

Section 1.2.1 Definitions

1. Include a definition for Development Agreement.

Section 1.3.3.6 Bonding

1. Added a reference to the location of the Signature Bond.

Section 1.3.3.8 Development Committee

1. Added a reference to the location of the Signature Bond and removed requirement for a performance bond to cover costs of improvements.

Section 1.3.4.3 DRT Submittal Requirements

1. Added language to define that the Stormwater Storage Facility Operations & Maintenance Agreement shall be submitted before the Zoning Certificate is issued.
2. Added minimum 300 dpi resolution requirement for digital submittals.

Section 1.3.4.4 DRT Forms and Checklists

1. Provide clarification on the intent of the forms and when they are required for a development.

Section 1.3.5.5 AWWB Water Main Connection Permit

1. Provide clarification to the chain of custody of the Water Main Connection Permit.

Section 1.5.1 As-Built Submittal

1. Add reference to the geoid model to be used for as-built surveys.
2. Add reference to the Continually Operating Reference Station (CORS) to be used for Global Position System (GPS) surveys and control datum.
3. Include a minimum observation time for GPS surveys for both critical and non-critical coordinates.
4. Include a maximum Position Dilution of Precision (PDOP) value allowed for GPS surveys.
5. Add minimum resolution requirements for digital submittals.

Section 1.6.1 Easements Discussion

1. Provide clarification that creek and ditch crossings must be made accessible prior to acceptance of the infrastructure.

Section 1.6.4 Easement Language

1. Add indemnity note for obstructions placed on easements.

Section 1.8 Acceptance

1. Provide clarification on Board authority and maintenance responsibility consistent with the current Backflow Prevention and Cross-Connection Control Policy.
2. Change "Sewer Division Manager" to "Sewer Collection System Manager".

Section 1.9 Warranty Period

1. Provide clarification that the Board or the City will invoice the developer for any costs associated with required repairs due to defects in materials and workmanship during the warranty period.

Section 1.10 Fees and Charges

1. Remove all references to sewer surcharge areas.

Figure 1.1 Development Review Process Flowchart

1. Changed language from "DRT Secretary" to "Public Works" for consistency.
2. Added an action item "BMPs Installed by the Contractor and Inspected by the City" prior to Issuance of Clearing, Grading & Utility Permit.

Appendix B-4 Drainage Checklist

1. Updated Stormwater Drainage checklist verbiage to coincide with forms.
2. Changed the basin/sub basin pre development, post development, and sub basin peak forms to reference a Point-of-Analysis approach instead of a basin approach for consistency with practice.

Appendix B-6 Signature Bond

1. Added the Signature Bond for Development to be executed under specific circumstances. The Signature Bond was referenced but no formal document was included in the manual.

Appendix E-2 Amendments

1. Amendment Number 1. As the PW Manual is amended, copies of the resolution, changes, and effective date will become a part of the manual.

<u>Section 2 – Traffic Signal Design Guidelines</u>

Section 2.1.1 Signal Heads

1. Added requirement for a quick disconnect feature on LED lenses and wire termination in a terminal block to simplify maintenance.

Section 2.1.6 Power Supply

1. Added reference to standard details and specify a service disconnect.

Standard Details

1. Modified Signals Detail Sheet 1 to conform to MUTCD requirements
2. Modified Detail Sheet 2 to incorporate decorative top
3. Modified Detail Sheet 3 to enlarge details
4. Modified material specifications on Signals Detail Sheet 4.

Section 3 – Traffic Calming

Section 3.1 Traffic Calming Process Summary

1. Removed requirement for 66% approval response limit to allow neighborhoods that do not meet traffic calming warrants to still petition with 80% approval required for installation.

Section 3.4 Neighborhood Petitions and Cost Share

1. Modified the amount of time a petition can circulate to 3 months.

Section 5 – Roadway Design

Section 5.2.4.3 Sidewalks

1. Changed the minimum sidewalk width to 4' for local and cul-de-sac streets, and 5' for arterials, collectors, and residential collectors.

Section 5.2.6 Driveways

1. Added language to clarify City involvement for driveways proposed to tie to state routes within the City of Auburn.

Section 5.2.6.2 Driveway Location

1. Revised the language that specifies driveway location for double frontage lots. The language clarifies that this will be in residential developments.
2. Changed the language that when a property is proposed for a change of use, existing driveways that do not comply with the Manual "should" be closed instead of "shall".

Section 5.2.6.3 Driveway Spacing

1. Removed driveway spacing requirements identified for Shug Jordan, EUD, and Auburn Outer Loop. Spacing along these roadways will be per the arterial standards.
2. Clarified that the average curb cut spacing requirement applies to "residential collector streets" instead of simply "collector streets" and how the calculation is performed.

Section 5.3.7 Deceleration Lanes and Tapers

1. Added reference to Appendix K for requirements for deceleration lanes.

Appendix K

1. Added notation for segments where right turn deceleration lanes are required

Appendix L

1. Updated list

Standard Details

1. Modified Streets Detail Sheet 12 to modify sidewalk requirements and identify requirements for ADA passing lanes.
2. Modified Streets Detail Sheet 13 to specify Detectable Warnings at handicap ramps as optional.
3. Added Streets Detail Sheet 25, Bus Turnout detail.

Section 7 – Drainage Section

Appendix T Stormwater Storage Facility Operation and Maintenance Agreement

1. Modified document to include owner/grantor contact information.

RESOLUTION NO. 12-245

WHEREAS, the City Council of the City of Auburn approved and adopted the Public Works Design and Construction Manual on November 2, 2010 with an effective date of January 1, 2011; and,

WHEREAS, the City Engineer, in collaboration with the development community, finds it necessary to implement material changes (a copy of which is attached and made a part hereof) for clarification and to comply with rule changes in the industry and to make these changes effective January 1, 2013.

NOW THEREFORE, BE IT RESOLVED that the City Council of the City of Auburn, Alabama does hereby approve and accept the changes to the Public Works Design and Construction Manual effective January 1, 2013.

ADOPTED AND APPROVED by the City Council of the City of Auburn, Alabama, this the 18th day of December 2012.

BILL HAM, JR., Mayor

ATTEST:

CHARLES M. DUGGAN, JR., City Manager

This page intentionally left blank.

Pending Updates for the Public Works Design & Construction Manual
December, 2012

Table of Contents

1. Added 5.2.4.4 and 5.3.2.4 Irrigation
2. Added 5.3.2.5 Gates
3. Added Appendix P-1 Irrigation Policy

Section 1 – General Information

Section 1.3.3.6 Bonding

1. Added a reference to the bonding amount of 125% to help reduce the forfeiting of bonds by developers.

Section 1.3.4.1 DRT Process Overview

1. Clarified language regarding meeting date and reference to the location of DRT information.
2. Changed continuance guidelines from three weeks to six months.
3. Changed denial guidelines to coincide with expiration of continuance.

Section 1.3.4.3 DRT Submittal Requirements

1. Reduced numbers of full-size copies of plans required from 2 to 1, added a PDF submittal, and require hard and digital copy of the drainage report and traffic impact study to be submitted to be consistent with current practice.
2. Clarified final submittal requirements to include recorded Stormwater Storage Facility Operation and Maintenance Agreement to be consistent with current practice.

Section 1.5 Project Completion Requirements As-Built Drawings

1. Updated reference to datum due to changes in the CORS.

Appendix A-1 Site Development Application for DRT Submittal

1. Removed reference to posting comments on the City's website due to most engineers not wanting comments posted.

Appendix A-2 Subdivision Development Application for DRT Submittal

1. Removed reference to posting comments on the City's website due to most engineers not wanting comments posted.

Appendix E-2 Amendments

1. Amendment Number 2. As the PW Manual is amended, copies of the resolution, changes, and effective date will become a part of the manual.

Section 2 – Traffic Signal Design Guidelines

Section 2.1.2 Signal Supports

1. Removed references to Pelco since Pelco no longer makes the poles.

Section 2.1.4 Communications

1. Added option for other types of communication equipment to allow flexibility in equipment.

Section 2.1.6 Power Supply

1. Clarified the type of UPS and housing requirements.

Section 2.1.7 Vehicle Detection

1. Specify detection method must be approved by the City Engineer.

Section 2.1.7.4 Wireless Detection

1. Removed reference to wireless as the preferred detection method to provide flexibility in types of detection equipment.

Section 2.1.10 Pedestrian Signal

1. Added manufacturer's information on the push button.

Section 2.1.10.1 Warrants

1. Included reference to sidewalk to the list of evaluation items.

Section 2.1.11 Intersection Lighting

1. Specified cobra head fixture manufacturer's information.

Appendix G

1. Modified notes to eliminate reference to Pelco.
2. Clarified color of ball at top of crown.
3. Added luminaire arm and assembly to the traffic signal pole assembly.

Standard Details

1. Modified Signals Detail Sheet 2 to correct signal head placement and specify pole manufacturer.
2. Modified Signals Detail Sheet 4 underground power source details.
3. Removed Pelco details for the pole, arm, and arm clamp.

<u>Section 3 – Traffic Calming</u>

Section 3.2.2 Speed

1. Modified speeds in Table 3.1 to include ranges.

Section 3.3 Result of Traffic Calming Analysis

1. Modified speeds to include ranges.

<u>Section 4 – Traffic Impact Studies</u>

Section 4.2.2 Evaluation Elements

1. Added internal site circulation and flow to the analysis to be consistent with current practice.

Section 4.2.3 Roadway Traffic Volumes/Traffic Counts

1. Extended time for use of volumes from one to two years unless the area has experienced significant traffic growth.

<u>Section 5 – Roadway Design</u>

Section 5.2 Roadway Design Elements

1. Added reference to the International Fire Code (IFC).

Section 5.2.4.1 Streets

1. Added reference to the ALDOT Guidelines for Operation relative to asphalt placement rates and thicknesses.
2. Added reference to the International Fire Code (IFC).

Section 5.2.4.3 Sidewalks

1. Clarified reference to collectors for sidewalk location on both sides of a roadway.

Section 5.2.4.4 Irrigation

1. Added reference to the Irrigation Policy (Appendix P-1)

Section 5.2.6.1 Design Criteria

1. Added language to allow use of an engineered, site specific driveway turnout design.

Section 5.2.10 Median Openings

1. Clarified the type, location, and length of medians.
2. Added language to specify City Council's purview for median openings on College Street and West Glenn Avenue.

Section 5.3.2.4 Irrigation

1. Added reference to the Irrigation Policy (Appendix P-1)

Section 5.3.2.5 Gates

1. Added information relative to the allowance of gates.

Section 5.3.5 Left Turn Lane Warrants at Unsignalized Intersections

1. Updated based on new NCHRP.

Section 5.3.6 Right Turn Lane Warrants

1. Updated based on new NCHRP.

Section 5.3.7 Deceleration Lanes and Tapers

1. Clarified language for requirements for deceleration lanes.

Section 5.6 Street Lighting

1. Added requirement that all new subdivisions will have street lighting installed and have lighting plans approved prior to installation.

Section 5.7 Signing and Pavement Markings

1. Added reference for solar-powered marker installation for approved mid-block crossings.

Appendix K

1. Removed street segments where right turn deceleration lanes are required.

Appendix L

1. Added Cary Creek Parkway.

Appendix N

1. Updated form to include submission contact information.

Standard Details

1. Modified Streets Detail Sheet 1 to clarify sidewalk requirement and minimum width of 4'.
2. Modified Streets Detail Sheet 2 to clarify sidewalk requirement must be waived by Planning Commission to allow use.
3. Modified Streets Detail Sheet 9 to require toewall at end of flume.
4. Modified Streets Detail Sheet 10 to allow use of an engineered, site specific driveway turnout design.
5. Modified Streets Detail Sheet 14 to denote Detectable Warnings at handicap ramps as optional and the cross slope on the bottom detail to ¼" per foot.
6. Modified Streets Detail Sheet 16 to show minimum width of multi-use path as 8' instead of 10'.
7. Modified Streets Detail Sheet 17 to show minimum width at entrance of parking area to 21' instead of 24' and extended dimension line to include gutter as requested by local engineers.
8. Modified Streets Detail Sheet 18 to extend dimension line to include gutter.
9. Modified Streets Detail Sheet 19 to extend dimension line to include gutter.
10. Modified Streets Detail Sheet 20 to replace perpendicular striping with tick marks, and reverse flow direction.
11. Updated Streets Detail Sheet 22 to reference latest International Building Code.

Section 7 – Drainage Section

Section 7.2.4 United States Geological Survey Regression Equation

1. Updated equation.

Section 7.2.5 Permeable Pavement

1. Clarified use of permeable pavement.

Standard Details

1. Added details for standard inlets with Neenah grates.
2. Updated Streets Detail Sheet 6 to require mechanical tamping around inlets.

RESOLUTION NO. 14-19

WHEREAS, the City Council of the City of Auburn approved and adopted the Public Works Design and Construction Manual on November 2, 2010 with an effective date of January 1, 2011; and,

WHEREAS, the City Engineer, in collaboration with the development community, finds it necessary to implement material changes (a copy of which is attached and made a part hereof) for clarification and to comply with rule changes in the industry and to make these changes effective immediately.

NOW THEREFORE, BE IT RESOLVED that the City Council of the City of Auburn, Alabama does hereby approve and accept the changes to the Public Works Design and Construction Manual effective immediately.

ADOPTED AND APPROVED by the City Council of the City of Auburn, Alabama, this the 4th day of February 2014.

Mayor

ATTEST:

City Manager

This page intentionally left blank.

Pending Updates for the Public Works Design & Construction Manual
February, 2014

Table of Contents

1. Added 5.11 Private Streets.
2. Added Appendix T-1. Stormwater Storage Facility Operation and Maintenance Agreement for Subdivisions.

Section 1 – General Information

Section 1.3.4.3 DRT Submittal Requirements

1. Removed required submittal of offsite easements for the initial submittal.
2. Added submission of required offsite easements with final submittal.
3. Changed submittal of the Stormwater Storage Facility Operation and Maintenance Agreement to be consistent with current practice.
4. Required digital copies of the final Traffic Impact Study and Drainage report with the final submittal.

Section 1.5.1 Surveying

1. Updated CORS name and reference number.
2. Updated water distribution features.
3. Updated storm water features to include outlet structure and shape.

Section 1.5.3 Submittal

1. Changed the submittal requirement to be consistent with current practice.

Section 1.6.4 Easement Language

1. Added a standard hold harmless note to cover irrigation systems.

Appendix E-2 Amendments

1. Amendment Number 3. As the PW Manual is amended, copies of the resolution, changes, and effective date will become a part of the manual.

Section 2 – Traffic Signal Design Guidelines

Section 2.1.1 Signal Heads

1. Removed references to GELcore.

Section 2.1.5 Signal Wiring, Conduit, and Junction Boxes

1. Clarified wiring installation methods to be consistent with current practice.

Section 2.1.7.3 Video Detection

1. Specify color camera instead of black and white.

Section 2.1.9 Intersection Signage

1. Changed specifications for illuminated signs to be consistent with current practice.

Section 2.1.10.3 Timing

1. Updated equation.

Standard Details

1. Modified Signals Detail Sheet 2 to show complete pole details.
2. Modified Signals Detail Sheet 4 underground power source details.

Section 5 – Roadway Design

Section 5.1

1. Added reference to plans adopted by the City and how they are incorporated into the PWDCM.

Section 5.2.4.3 Sidewalks

1. Added reference to Public Right of Way Accessibility Guidelines (PROWAG).
2. Clarified local commercial roadways to have 5' wide sidewalk.

Section 5.2.6.1 Design Criteria

1. Added language to allow additional width at the right of way for radius flares.

Section 5.2.6.5 Shared Driveways

1. Added language to specify the maximum width of a shared residential driveway.

Section 5.3.6 Right Turn Lane Warrants

1. Changed the National Cooperative Highway Research Program Report (NCHRP) from Report 279 to Report 457.

Section 5.11 Private Street

1. Incorporated language for the construction of private street.

Appendix K

1. Updated street names and segments.

Appendix L

1. Corrected the spelling of 'Mitcham' Avenue.

Appendix M

1. Added new streets

Standard Details

1. Modified Streets Detail Sheet 1 to clarify slope of greenspace for non-curb and gutter streets.
2. Added Street Detail Sheet 10A and 10B to show options for constructing sidewalks across driveway turnouts.
3. Modified Streets Detail Sheet 12 to add reference to PROWAG and added local commercial reference to 5' wide sidewalk.
4. Modified Streets Detail Sheet 13 to denote Detectable Warnings at handicap ramps as required.
5. Modified Streets Detail Sheet 14 to denote Detectable Warning Device as required.

Section 7 – Drainage Section

Section 7.4.5 Operation and Maintenance

1. Clarified submission requirements for the agreement.

Section 7.5.6 Conditional Letter of Map Revision

1. Changed the requirement of a CLOMR submission from ‘may’ to ‘will’ and adjusted when the CLOMR is needed.

Appendix T-1

1. Included an Operation and Maintenance Agreement applicable to subdivision projects.

This page intentionally left blank.

RESOLUTION NO. 14-267

WHEREAS, the City Council of the City of Auburn approved and adopted the Public Works Design and Construction Manual on November 2, 2010 with an effective date of January 1, 2011; and,

WHEREAS, the City Engineer, in collaboration with the development community, finds it necessary to implement material changes (a copy of which is attached and made a part hereof) for clarification and to comply with rule changes in the industry and to make these changes effective January 1, 2015.

NOW THEREFORE, BE IT RESOLVED that the City Council of the City of Auburn, Alabama does hereby approve and accept the changes to the Public Works Design and Construction Manual effective January 1, 2015.

ADOPTED AND APPROVED by the City Council of the City of Auburn, Alabama, this the 16th day of December 2014.

BILL HAM, JR., Mayor

ATTEST:

CHARLES M. DUGGAN, JR., City Manager

This page intentionally left blank.

Summary of Proposed Changes to the Public Works Design & Construction Manual (PWDCM)
December, 2014

Table of Contents

1. Added Appendix P-2 Decorative Street Signs Policy.

Section 1 – General Information

Section 1.5.3 Project Completion Requirements – As-Built Drawings

1. Added language to specify how long the City quality control check should take.

Appendix B-1 and B-2

1. Modified forms to include the project name, modified the width of the construction exit pad, and added C-POP Silt Fence.

Appendix E-2 Amendments

2. Amendment Number 4. As the PW Manual is amended, copies of the resolution, changes, and effective date will become a part of the manual.

Section 2 – Traffic Signal Design Guidelines

Section 2.1.3 Cabinet and Controller Equipment

1. Clarified the requirement for cabinets.

Section 2.1.5 Signal Wiring, Conduit, and Junction Boxes

1. Clarified the size and lid requirements for junction boxes.

Section 2.1.6 Power Supply

1. Clarified the requirement for cabinets.

Section 2.1.10 Pedestrian Signal

1. Added language referencing the Public Rights-of-Way Accessibility Guidelines' (PROWAG).

Section 2.1.10.3 Timing

1. Changed pedestrian walking time from four seconds to three seconds and referenced the MUTCD.

Appendix G Traffic Signal Notes

1. Updated notes to be consistent with current practice on type of Mast Arm Pole and Pedestrian Pole. This includes type of pedestrian pole to be used.

Section 3 – Traffic Calming

Appendix I

1. Modified the example on the form.
2. Added reference to online form.

Section 5 – Roadway Design

Section 5.2.4.3 Sidewalks

1. Added language referencing the Public Rights-of-Way Accessibility Guidelines' (PROWAG).

Section 5.7.1 Street Name Signs

1. Incorporated language from the Decorative Street Signs Policy (Appendix P-2).

Appendix M

2. Changed Corporate Drive to Corporate Parkway.

Appendix N

1. Added reference to online form.

Standard Details

1. Modified Streets Detail Sheet 6 to clarify temporary and permanent patch requirements.
2. Modified Streets Detail Sheet 14 to clarify slope requirements for handicap ramps.

RESOLUTION NO. 15-285

WHEREAS, the City Council of the City of Auburn approved and adopted the Public Works Design and Construction Manual on November 2, 2010 with an effective date of January 1, 2011; and,

WHEREAS, the City Engineer, in collaboration with the development community, finds it necessary to implement material changes (a copy of which is attached and made a part hereof) for clarification and to comply with rule changes in the industry and to make these changes effective January 1, 2016.

NOW THEREFORE, BE IT RESOLVED that the City Council of the City of Auburn, Alabama does hereby approve and accept the changes to the Public Works Design and Construction Manual effective January 1, 2016.

ADOPTED AND APPROVED by the City Council of the City of Auburn, Alabama, this the 15th day of December 2015.

Mayor

ATTEST:

City Manager

This page intentionally left blank.

Pending Updates for the Public Works Design & Construction Manual
December, 2015

Table of Contents

1. Added Section 5.6.4 Decorative Pedestrian Lighting.
2. Added Section 5.9.1 Transit Stops.
3. Added Section 5.12 Greenways.

Section 1 – General Information

Section 1.2.5 Acronyms and Definitions - Definitions

1. Added definition for ADA.
2. Added reference to the digital location for the standard specifications and standard details.

Section 1.3.1 Development Process – Overview

1. Added reference to the territorial jurisdiction of the City.

Section 1.3.3 Development Process – Subdivision

1. Added reference to reviews affected by the Lee County Planning Commission in the territorial jurisdiction of the City.

Section 1.3.3.4 Development Process – Engineering Plan

1. Added reference for developments in the territorial jurisdiction of the City.

Section 1.3.3.6 Development Process – Bonding

1. Added reference for street lighting requirements.

Section 1.3.4.1 Development Review Team – DRT Process Overview

1. Added review time for developments in the territorial jurisdiction of the City.

Section 1.3.4.3 Development Review Team – DRT Submittal Requirements

1. Added option for digital submittals.

Section 1.3.5 Permits

1. Added reference to departments responsible for each permit

Section 1.3.5.4 Permits – Clearing, Grading, and Utility Permit

1. Added requirement for submission of soil proctor information as part of this permit.

Section 1.4.2 Project Completion Requirements – Construction – Materials

1. Added reference to the digital location for the standard specifications and standard details.

Section 1.4.4 Project Completion Requirements – Construction – Inspection and Testing

1. Added reference for inspection of developments within the territorial jurisdiction.

Section 1.5.1 Project Completion Requirements – As-Built Drawings

1. Updated the reference to the Geoid model name.
2. Added requirements for control points and modified the horizontal and vertical accuracy of critical and non-critical points.

3. Added requirements for as-built drawings when pertaining to City maintained infrastructure.

Section 1.11.2.2 Updates and Waivers to the Manual - Procedure

1. Changed the appeal body from the Building Board of Adjustment to Planning Commission.

Appendix A-2

1. Modified form to include Lee County Review.

Appendix B-1 and B-2

1. Updated the forms to modify the water tank elevation to 820 on the pressure calculations.

Appendix E-1

1. Modified form to remove multiple waivers and provide justification area.

Appendix E-2 Amendments

1. Amendment Number 5. As the PW Manual is amended, copies of the resolution, changes, and effective date will become a part of the manual.

<u>Section 2 – Traffic Signal Design Guidelines</u>

Section 2.1.1 Signal Design Elements – Signal Heads

1. Clarified the type and color of mounting hardware and positioning of signal heads.

Section 2.1.2 Signal Design Elements – Signal Supports

1. Removed reference to separation requirements.

Section 2.1.3 Signal Design Elements – Cabinet and Controller Equipment

1. Modified the requirement for cabinets.

Section 2.1.4 Signal Design Elements – Communications

1. Clarified how equipment is handled when an intersection is modified or upgraded.

Section 2.1.5 Signal Design Elements – Signal Wiring, Conduit, and Junction Boxes

1. Added requirements for wiring when an intersection is modified or upgraded.
2. Clarified requirements for conduit.

Section 2.1.6 Signal Design Elements – Power Supply

1. Clarified how the power source is determined and changed the battery backup part number.

Section 2.1.7 Signal Design Elements – Vehicle Detection

1. Modified the requirement for video detection when an intersection is newly signalized or modified.
2. Clarified the requirements for loop wire.

Section 2.1.7.3 Signal Design Elements – Video Detection

1. Modified video detection requirements to include bicycles.
2. Added color requirement for cameras and mounting hardware.

Section 2.1.9 Signal Design Elements – Intersection Signage

1. Clarified requirements for illuminated signs.

Section 2.1.10 Pedestrian Signal

1. Clarified requirements for mounting hardware.
2. Modified requirements for pedestrian push buttons, including signage and Polera settings.

Section 2.1.11 Intersection Lighting

1. Clarified luminaire assembly fixture type.

Section 2.4 Construction

1. Added notification requirement to beginning work.

Section 2.4.3 Inspection

1. Added inspection requirements for traffic signals.

Appendix H

1. Added Sheet 5- Decorative Pedestrian Light detail.
2. Added Sheet 6 – Pedestrian Push Button Pole detail.

<u>Section 5 – Roadway Design</u>

Section 5.2.4.3 Roadway Design Elements – Sidewalks

1. Clarified cross slope requirements for sidewalk.
2. Added requirements for streetscape improvements within the Downtown Area, to include wider sidewalks, street trees, and decorative lighting.
3. Clarified sidewalk termination grading requirements.
4. Added inspection requirements for sidewalk within the right of way.
5. Added requirements for street trees, including tree wells, brick color, and Silva Cells.

Section 5.2.7.2 Roadway Design Elements - Bicycle and Pedestrian Facilities – Bicycle Lanes

1. Modified reference to design requirements for bicycle lanes.

Section 5.2.7.3 Roadway Design Elements - Bicycle and Pedestrian Facilities – Shared Roadway

1. Modified reference to design requirements for shared roadways.

Section 5.3 Intersection Design Elements

1. Added language regarding street jogs.

Section 5.6.4 Street Lighting – Decorative Pedestrian Lighting

1. Added requirements for decorative street lighting.

Section 5.8 Right-of-way Planting

1. Added requirements for street trees, including tree wells, brick color, and Silva Cells.

Section 5.9.1 Access Management and Coordination - Transit Stops

1. Added requirement for transit stops for purpose built student housing.

Section 5.12 Greenways

1. Added requirements for greenways.

Appendix K

1. Changed Richland Road segment.
2. Added segment to Wire Road.

Appendix L

1. Added directional points to seven (7) collector roads.
2. Added six (6) collector roads.

Appendix O

1. Modified Streets Detail Sheet 11 to specify minimum sidewalk cross slope, add a requirement for joint sealant, and make the expansion material consistent.
2. Modified Streets Detail Sheet 17 to clarify width requirements at landscaped islands.
3. Added Sheet 29 Silva Cell detail sheet.
4. Added Sheets 30 through 35 Tree Well and Grate detail sheets.
5. Added Sheet 36 Bus Turnout detail.
6. Added Sheet 37 Right In Right Out detail.
7. Changed all applicable slopes on details to percent instead of fractional representations.
8. Changed all applicable slopes on sidewalk details to include word ‘Maximum’.
9. All sheets were renumbered due to the additional sheets.

RESOLUTION NO. 17-329

WHEREAS, the City Council of the City of Auburn approved and adopted the Public Works Design and Construction Manual on November 2, 2010 with an effective date of January 1, 2011; and,

WHEREAS, the City Engineer, in collaboration with the development community, finds it necessary to implement material changes (a copy of which is attached and made a part hereof) for clarification and to comply with rule changes in the industry and to make these changes effective January 1, 2018.

NOW THEREFORE, BE IT RESOLVED that the City Council of the City of Auburn, Alabama does hereby approve and accept the changes to the Public Works Design and Construction Manual effective January 1, 2018.

ADOPTED AND APPROVED by the City Council of the City of Auburn, Alabama, this the 19th day of December 2017.

Mayor

ATTEST:

City Manager

This page intentionally left blank.

Summary of Proposed Changes to the Public Works Design & Construction Manual
December 2017

Table of Contents

1. Added Section 1.3.5.10 Sanitary Sewer Connection Permit.
2. Renumbered Other Permits, Section 1.3.5.11.
3. Added Appendix P-3 Downtown Sidewalks and Pedestrian Lighting Map.
4. Added Appendix P-4 Decorative Pedestrian Lighting Master Plan.

Section 1 – General Information

Section 1.3.1 Development Process – Overview

1. Added reference to infrastructure requirements for developments within the City.

Section 1.3.3.2 Lot Layout Plans

1. Added reference to the Subdivision Regulations.

Section 1.3.3.3 Preliminary Plat

1. Added reference to the Subdivision Regulations.

Section 1.3.3.4 Engineering Plan

1. Added reference to the checklist in Appendix B.

Section 1.3.3.5 Final Plat

1. Added reference to the Subdivision Regulations.

Section 1.3.4.1 Development Review Team – DRT Process Overview

1. Added review time for revised plan submittals.

Section 1.3.4.2 Development Review Team – Preconstruction Meeting

1. Clarified requirements and attendees for the preconstruction meeting.

Section 1.3.4.3 DRT Submittal Requirements

1. Modified submittal requirements.

Section 1.3.5.5 Permits – AWWB Water Main Connection Permit

1. Added references to the WRM Design and Construction Manual.

Section 1.3.5.6 Permits – Blasting Permit

1. Added references to the Communications Division of Public Safety and the State of Alabama.

Section 1.3.5.8 Permits – Building Permit

1. Removed reference to the number of permits required for developments.

Section 1.3.5.10 Permits – Sanitary Sewer Connection Permit

1. Added information relative to the requirements for sanitary sewer connection permits.

Section 1.5.1 Surveying

1. Added requirement for as builts for decorative pedestrian lighting.

Section 1.6.1 Discussion

1. Removed information relative to the rededication of easements.

Section 1.9 Project Completion Requirements – Warranty Period

1. Clarified when the warranty period for a development starts and the responsibility of the developer during the warranty period.

Appendix A-1 Site Development Application for DRT Submittal

1. Clarified required email address for comments.
2. Added notation of applicant/owner contact information if DRT comments are to be provided to someone other than engineer.

Appendix A-2 Subdivision Development Application for DRT Submittal

1. Clarified required email address for comments.
2. Added notation of applicant/owner contact information if DRT comments are to be provided to someone other than engineer.

Appendix B-1 Site Development Plans Engineering Checklist

1. Added DRT permit number.
2. Added statement regarding comparison points.

Appendix B-2 Subdivision Construction Plans Engineering Checklist

1. Added DRT permit number.
2. Added statement regarding comparison points.

Appendix B-3 Site Plan Sufficiency Checklist

1. Clarified how the form should be filled out.

Appendix E-1 Request for Design and Construction Standard Waiver Form

1. Added City logo and applicant address.

Appendix E-2 Amendments

1. Amendment Number 6. As the PW Manual is amended, copies of the resolution, changes, and effective date will become a part of the manual.

<u>Section 2 – Traffic Signal Design Guidelines</u>

Section 2.1.1 Signal Design Elements – Signal Heads

1. Clarified the location of the wire for mast arm intersections.

Section 2.1.3 Cabinet and Controller Equipment

1. Added requirement for spare conduit.

Section 2.1.5 Signal Wiring, Conduit and Junction Boxes

1. Added requirement for spare conduit.

Section 2.1.6 Signal Design Elements – Power Supply

1. Added color requirements for the service disconnect.

Section 2.1.7.3 Signal Design Elements – Video Detection

1. Added color requirement for mounting hardware.

Section 2.1.9 Signal Design Elements – Intersection Signage

1. Changed the photocell requirements for illuminated signs.

Standard Details

1. Modified Signals Detail Sheet 1 to delete R10-3e sign.
2. Modified Signals Detail Sheet 2 to clarify location of cables, clarify location of pedestrian signal heads, specify the type of Holophane pole, and clarify distance requirements for the push button.
3. Modified Signals Detail Sheet 3 to clarify loop lengths.
4. Modified Signals Detail Sheet 5 to specify breakaway post model number.
5. Modified Signals Detail Sheet 6 to clarify wire sizes, bury depths for conduit, and denote the decorative ball.
6. Added details for the breakaway pole bases and notes (Sheets 7-9).

Section 4 – Traffic Impact Studies

Section 4.2.13 Mitigation Thresholds and Measures

1. Clarified requirements of traffic impact studies in regards to roadways within the study area that exceed the minimum acceptable LOS standard.

Section 5 – Roadway Design

Section 5.2.4 Typical Street Section

1. Clarified width of roadway at fire hydrants in Table 5.4.

Section 5.2.4.1 Roadway Design Elements – Streets

1. Added requirement for coordination with US Postal Service for centralized mail systems.

Section 5.2.4.3 Roadway Design Elements – Sidewalks

1. Expanded requirements for streetscape improvements within the Downtown Sidewalks & Pedestrian Lighting boundary, to include wider sidewalks, street trees, and decorative lighting. The specific reference to the Downtown Area was removed.

2. Added option for developer to pay for required sidewalk in locations deemed appropriate by the City.
3. Added distance requirements for sidewalk to extend to the nearest driveway or roadway for termination.

Section 5.2.6.5 Driveways – Shared Driveways
1. Clarified width for shared residential lots.

Section 5.2.8 Cul-De-Sacs
1. Clarified width requirement at fire hydrants.

Section 5.3.2.5 Intersection Design Elements - Gates
1. Added reference to the International Fire Code, latest edition.

Section 5.3.3 Sight Distance
1. Revised Table 5.7.

Section 5.6 Street Lighting
1. Added requirements for lighting in parking and/or common areas and at development entrances.

Section 5.6.4 Street Lighting – Decorative Pedestrian Lighting
1. Added reference to the Downtown Sidewalks and Pedestrian Lighting Map and the Decorative Pedestrian Lighting Master Plan for decorative pedestrian lighting.
2. Add a provision for the City to provide decorative pedestrian lights and/or panels associated with the project.

Section 5.11 Private Streets
1. Clarified the definition of a private street and added a requirement for sidewalk, to be determined during the DRT review.
2. Clarified width requirement at fire hydrants.

Section 5.12 Greenways
1. Added a reference to the Parks, Recreation and Culture Master Plan.

Appendix K Arterial Roads List
1. Clarified extents for North Donahue Drive.

<u>Standard Details</u>
1. Modified Streets Detail Sheet 19 to allow for use on trails and changed all applicable slopes on details to percent instead of fractional representations.
2. Modified Streets Detail Sheet 24 to clarify ADA sign distance requirement.

3. Modified Streets Detail Sheet 25 to remove specific reference to accessible parking requirement and added reference to the IBC.
4. Modified tree well frame detail sheets (Sheet 31, 32, 34).
5. Added detail for a roadway flare at a hydrant (Sheet 38).

Appendix P-3 Downtown Sidewalks and Pedestrian Lighting Map

1. Added map.

Added Appendix P-4 Decorative Pedestrian Lighting Master Plan

1. Added map.

Section 7 – Drainage

Section 7.3.8.5 Outlet Protection

1. Added requirements for installation of headwalls.

Section 7.4.1 Comparison Points

1. Clarified comparison point requirements.

Section 7.4.2.4 Regional Detention

1. Clarified construction and certification requirements for regional detention facilities.

This page intentionally left blank.

RESOLUTION NO. 18-323

WHEREAS, the City Council of the City of Auburn approved and adopted the Public Works Design and Construction Manual on November 2, 2010 with an effective date of January 1, 2011; and,

WHEREAS, the City Engineer, in collaboration with the development community, finds it necessary to implement material changes (a copy of which is attached and made a part hereof) for clarification and to comply with rule changes in the industry and to make these changes effective January 1, 2019.

NOW THEREFORE, BE IT RESOLVED that the City Council of the City of Auburn, Alabama does hereby approve and accept the changes to the Public Works Design and Construction Manual effective January 1, 2019.

ADOPTED AND APPROVED by the City Council of the City of Auburn, Alabama, this the 18th day of December 2018.

Mayor

ATTEST:

City Manager

This page intentionally left blank.

Summary of Proposed Changes to the Public Works Design & Construction Manual
December 2018

Manual

1. Removed all references to Public Works Department, Public Works Director and Codes Enforcement and replaced with Engineering Services Department, City Engineer and Inspection Services.

Title Page

1. Modified the name of the manual to reflect the new department due to the reorganization of February 1, 2018.

Section 1 – General Information

Section 1.2.5 Definitions

1. Corrected web link to the Standard Specifications and Details.

Section 1.3.4.3 Development Review Team – DRT Submittal Requirements

1. Added reference to the Auburn Permit Portal.
2. Clarified the submittal requirements.

Section 1.3.5 Permits

2. Added reference to Sanitary Sewer Connection permit.

Section 1.3.5.5 Permits – AWWB Water Main Connection Permit

1. Added time of at least 48 hours notification.

Section 1.3.5.10 Permits – Sanitary Sewer Connection Permit

1. Added time of at least 48 hours notification.

Section 1.4.2 Materials

1. Corrected web link to the Standard Specifications.

Section 1.4.2.1 Materials – Submittals

1. Modified number if submittals from five (5) to four (4).
2. Modified number of returned approved submittals from two (2) to one (1).

Section 1.5 Project Completion Requirements – As-Built Drawings

1. Added Preliminary Acceptance Letter.
2. Modified “Subdivision” to “Single-Family Residential.
3. Added “fee-simple or condo”.
4. Modified “Site Plan” to “Commercial or Multi-family Residential”.
5. Added timeline of ten (10) days for review of as-builts.

Appendix A-1 Site Development Application for DRT Submittal

1. Added space to include additional email addresses.
2. Added reference to the Auburn Permit Portal.

Appendix A-2 Subdivision Application for DRT Submittal

1. Added space to include additional email addresses.
2. Added reference to the Auburn Permit Portal.
3. Removed option of not posting review comments on the City's website.

Appendix E-1 Request for Design and Construction Standard Waiver Form

1. Added reference to section 1.11.2.1 – Waiver Criteria.

<u>Section 2 – Traffic Signal Design Guidelines</u>

Section 2.1.3 Signal Design Elements – Cabinet and Controller Equipment

1. Clarified cabinet components and controller for Flashing Yellow Arrow (FYA).

Section 2.1.4 Signal Design Elements – Communications

1. Clarified new installation requirements.

Section 2.1.4.2 Signal Design Elements – Communications – New System Implementation

1. Modified requirements for new signal installations.

Section 2.1.5 Signal Design Elements – Signal Wiring, Conduit, and Junction Boxes

1. Added requirements for wiring flashing yellow arrow (FYA) with associated wiring table.
2. Clarified requirements for conduit.

Section 2.1.7.3 Signal Design Elements – Vehicle Detection – Video Detection

1. Added requirement for video detection routing.

Section 2.1.9 Signal Design Elements – Intersection Signage

1. Added requirement for illuminated sign power and mounting locations.

Section 2.1.11 Signal Design Elements – Intersection Lighting

1. Added requirement for photocell location.

Section 2.4 Construction

1. Added requirement for pre-construction meeting.

Appendix H Traffic Signal Details and Specifications

1. Sheet 7: Revised the Ground Rod Detail to show decorative base.
2. Sheet 8: Revised Pole Handhole Detail to show decorative base.
3. Sheet 8: Added Developer Requirement notes.
4. Sheet 8: Changed 2" min. above finished grade to 1" min.

5. Sheet 9: Added four new general notes.
6. Sheet 9: Revised Lighting Fixture Schedule.
7. Added new Sheet 10 with Weatherproof Receptacle - Internal Base Location details.
8. Added new Sheet 11 with Weatherproof Receptacle - External Post Shaft Location details.
9. Added new Sheet 12 with Panelboard Schedule and Enclosure notes.
10. Added new Sheet 13 with Panel details.
11. Added new Sheet 14 with Panel Circuit details.
12. Added new Sheet 15 with Panel Circuit details.
13. Added new Sheet 16 with Pedestal details.
14. Added new Sheet 17 with Panel mounting details.

<u>Section 4 – Traffic Impact Studies</u>

Section 4.1.2 Traffic Impact Study Requirements – Applicability

1. Added requirement for updated traffic impact study if the development build-out is not completed within 10 years.

<u>Section 5 – Roadway Design</u>

Section 5.2.4.3 Roadway Design Elements – Sidewalks – Design Criteria

1. Added requirements for including driveway crossings.

Section 5.3.5 Roadway Design Elements – Intersection Design Elements – Left Turn Lane Warrants and Unsignalized Intersections

1. Modified left turn lane requirement.
2. Replaced with correct tables for Figure 5.3, 5.4, and 5.5.

Section 5.3.6 Roadway Design Elements – Intersection Design Elements – Right Turn Lane Warrants

1. Modified right turn lane requirement.

Section 5.3.7 Roadway Design Elements – Intersection Design Elements – Deceleration Lanes and Tapers

1. Modified deceleration lanes and taper requirements.

Section 5.4.2.4 Design of Utilities on Street Right of Way – General Requirements – Utility Patch Repairs

1. Added reference to section 5.5.2.

Section 5.5.2.1 Design of Pavements – Pavement Repairs/Retrofit – Asphalt

1. Modified depth requirement from four (4) inches to five (5) inches.
2. Clarified alternate permanent patch.

Section 5.6.4 Street Lighting – Decorative Pedestrian Lighting

1. Added reference to the Decorative Pedestrian Lighting Master Plan.

Appendix O Standard Drawings and Details

1. Sheet 1: Placed asterisk (*) to denote two equal lifts.
2. Sheet 1: Removed reference to ESAL Range C/D.
3. Sheet 4: Added note specifying deflection of water main.
4. Sheet 6: Modified Area to be milled.
5. Sheet 10: Added hatching to delineate concrete flume.
6. Sheet 10: Modified Swale title to Concrete Swale.
7. Sheet 11: Inserted reference to section 5.2.6 in note #3.
8. Sheet 11: Added note #10 referring to non-cub and gutter streets.
9. Sheet 11: Added hatching delineating concrete apron.
10. Sheet 11: Removed minimum dimension.
11. Sheet 14: Inserted "Current" to note #4.
12. Sheet 14: Removed reference to Parks and Recreations and Inserted Public Works Department in note #9.
13. Sheet 14: Clarified tack requirements in note #5.
14. Sheet 15: Referenced only Prowag Standards in note #3.
15. Sheet 15: Added note #4 referring to sidewalks adjacent to inlets.
16. Sheet 18: Clarified dimensions Right Alternate View detail.
17. Sheet 38: Clarified the Limits of Hydrant area.
18. Sheet 38: Inserted clarification for different street type width requirements.

Appendix P-4 Decorative Pedestrian Lighting Plan

1. Revised the map to include Addendums 1 and 2 showing locations along Opelika Road for the Decorative Pedestrian Lighting Master Plan.

Appendix R Storm Sewer Standard Details

1. Sheet 1: Modified details for traffic rated and non-traffic rated cast iron rings and cover.
2. Sheet 6: Changed Utility Conflict Manhole title to Utility Conflict Junction Box.
3. Sheet 6: Removed general sanitary sewer note from detail.
4. Sheet 6: Removed reference to Welded wire.
5. Sheet 6: Removed all references to cast iron steps.
6. Sheet 7: Added requirement for welded wire fabric in the sloped headwall detail.
7. Sheet 8: Removed reference to cast iron steps.
8. Sheet 8: Added note required traffic rated ring and cover.
9. Sheet 8: Added note recommending rebar in junction box top.
10. Sheet 9: Removed Plan view and Precast Manhole details.
11. Sheet 9: Removed reference to cast iron steps.
12. Sheet 9: Added title to Max. Pipe Size chart.

13. Sheet 10: Added “minimum” to Ditch width requirement.
14. Sheet 11: Removed all details related to Inlet With Gutter Detail.

This page intentionally left blank.

RESOLUTION NO. 19-338

WHEREAS, the City Council of the City of Auburn approved and adopted the Engineering Design and Construction Manual on November 2, 2010 with an effective date of January 1, 2011; and

WHEREAS, the City Engineer, in collaboration with the development community, finds it necessary to implement material changes (a copy of which is attached and made a part hereof) for clarification and to comply with rule changes in the industry and to make these changes effective January 1, 2020.

NOW, THEREFORE, BE IT RESOLVED that the City Council of the City of Auburn, Alabama does hereby approve and accept the changes to the Engineering Design and Construction Manual effective January 1, 2020.

ADOPTED AND APPROVED by the City Council of the City of Auburn, Alabama, this the 17th day of December 2019.

Mayor

ATTEST:

City Manager

This page intentionally left blank.

Summary of Proposed Changes to the Engineering Design & Construction Manual
December 2019

<u>Section 1 – General Information</u>
Section 1.3.4.1 Development Review Team – DRT Process Overview
1. Inserted paragraph for Large or Complex Projects.

Section 1.3.4.3 Development Review Team – DRT Submittal Requirements
1. Revised submittal requirements to require digital submittals in addition to hard copies.

Appendix B-1 – DRT Checklist for Site Development Construction Plans
1. Inserted additional notes for erosion control.

Appendix B-2 – DRT Checklist for Subdivision Construction Plans
1. Inserted additional notes for erosion control.

<u>Section 2 – Traffic Signal Design Guidelines</u>
Section 2.1.4 Signal Design Elements – Communications
1. Clarified network communication requirements.

Section 2.1.4.2 Signal Design Elements – Communications – New System Implementation
1. Specified Ethernet Field Switch Model.

Section 2.1.6 Signal Design Elements – Power Supply
1. Specified internal component route.

Appendix H – Traffic Signal Details and Specifications
1. Sheet 6: Added note specifying internal component route.

<u>Section 3 – Traffic Calming</u>
1. Removed all references to Public Works Department and replaced with Engineering Services Department.

Section 3.1 Traffic Calming Process Summary
1. Removed reference to Appendix I and added website location.
2. Inserted verbiage regarding traffic calming request re-submittals.

Section 3.4 Neighborhood Petitions and Cost Share
1. Removed verbiage regarding circulation of petition.

Appendix I – Traffic Calming Request Form
1. Delete form from manual. Online version is currently being utilized.

<u>Section 5 – Roadway Design</u>
Section 5.2.4.1 Roadway Design Elements – Streets

1. Added requirements for temporary turnarounds.

Section 5.2.4.3 Sidewalks

1. Removed reference to Appendix N and added website location.

Appendix K – Arterials Roads List

1. Updated the List to include new streets.

Appendix L – Collector and Residential Collector Road List

1. Updated the List to include new streets.

Appendix N – Request for Sidewalk Construction Form

1. Delete form from manual. Online version is currently being utilized.

Appendix O – Standard Drawings and Details

1. Sheet 12: Revised details with 2' green space options.
2. Sheet 13: Revised detail clarifying ramp locations.
3. Sheet 20: Modified dimension lines.
4. Sheet 29: Added note about utility conflicts.
5. Sheet 31: Revised detail with vertical tabs for frame installation.
6. Sheet 32: Revised detail with vertical tabs for frame installation.
7. Sheet 34: Replaced detail with new detail.
8. Added new Sheet 39 with planting details.
9. Added new Sheet 40 with planting details.
10. Added new Sheet 41 with planting details.
11. Added new Sheet 42 with planting details.
12. Added new Sheet 43 with planting details.
13. Added new Sheet 44 with planting details.
14. Added new Sheet 45 with planting details.
15. Added new Sheet 46 with planting details.
16. Added new Sheet 47 with planting details.

Appendix P – Request For installation of Traffic Signs

1. Updated Department information.

Appendix P-1 – Irrigation Policy

1. Updated Department information.

Appendix P-2 – Decorative Street Signs Policy

1. Updated Department information.

Appendix P-3 – Downtown Sidewalks and Pedestrian Lighting Map

1. Updated the map legend indicating sidewalk locations.
2. Added Residential Collector classification with sidewalk locations.

Appendix Q – Visual Inspection Checklist

1. Updated Department Information.

Appendix R- Storm Sewer Standard Details

1. Sheet 7: Added “minimum” to slope required for sloped headwall detail.

Appendix S – Stormwater Storage Facility Final Certification

1. Updated Department Information.

This page intentionally left blank.

RESOLUTION NO. 21-273

WHEREAS, the City Council of the City of Auburn approved and adopted the Engineering Design and Construction Manual on November 2, 2010 with an effective date of January 1, 2011; and

WHEREAS, the City Engineer, in collaboration with the development community, finds it necessary to implement material changes (a copy of which is attached and made a part hereof) for clarification and to comply with rule changes in the industry and to make these changes effective January 1, 2022.

NOW THEREFORE, BE IT RESOLVED that the City Council of the City of Auburn, Alabama does hereby approve and accept the changes to the Engineering Design and Construction Manual effective January 1, 2022.

ADOPTED AND APPROVED by the City Council of the City of Auburn, Alabama, this the 21st day of December 2021.

Ron Anders

Mayor

ATTEST:

City Manager

This page intentionally left blank.

Pending Updates for the Engineering Design & Construction Manual
December 2021

<u>Section 1 – General Information</u>

Section 1.3.4.3 Development Review Team – DRT Submittal Requirements

1. Referenced the Auburn Permit Portal for submittals.
2. Revised application requirements for initial and final submittals.

Section 1.4.2.1 Project Completion Requirements - Submittals

1. Revised submittal packages to be digital.

Section 1.11.2.2 Updates and Waivers to the Manual

1. Inserted timeline of 30 days for the appeal.

Appendix B-1 – DRT Checklist for Site Development Construction Plans

1. Clarified and inserted additional submittal requirement for Electrical plans for required pedestrian lighting.

Appendix B-2 – DRT Checklist for Subdivision Construction Plans

1. Clarified and inserted additional submittal requirement for Electrical plans for required pedestrian lighting.

Appendix B-5 – DRT Meeting Waiver

1. Removed DRT Meeting Waiver form.

<u>Section 2 – Traffic Signal Design Guidelines</u>

Section 2.1.9 Signal Design Elements – Intersection Signage

1. Removed requirements for photoelectric cell control of luminaires at disconnect.

Section 2.1.10 Signal Design Elements – Pedestrian Signal

1. Inserted requirements for wiring standards of pedestrian signal heads.

Section 2.1.11 Signal Design Elements – Intersection Lighting

1. Revised location of luminaire photoelectric cells from base of disconnect to individual luminaire housing.

Section 2.2.3 Signal Timing – Signal Timing Plans

1. Added verbiage regarding coordinated signal systems.

Appendix H – Traffic Signal Details and Specifications

1. Reformatted all details to eliminate ambiguities.
2. Revised title to “Signal Details and Standard Drawings”.
    a. Revised Sheet 1 (2.03) <u>Traffic Signal Signs</u>: Inserted Flashing Yellow Signal Head and “Left Turn Yield On Flashing Yellow Arrow”.
    b. Added new detail (2.06) <u>Typical Street Light Pole Detail</u>.
    c. Added new Street Lighting Fixture Schedule to detail (2.07).

<u>Section 3 – Traffic Calming</u>

Section 3.1 Traffic Calming Process Summary

1. Revised the review period to two (2) years for non-warranted applications.
2. Clarified that construction will be scheduled by the Public Works Department.

Section 3.4.1 Neighborhood Petitions and Cost Share – Standard Materials

1. Revised the standards for materials and sign installation.

Section 3.4.2 Neighborhood Petitions and Cost Share – Standard Landscaping

1. Revised title to “Landscaping".
2. Revised the standards for landscaping of traffic circles.

Section 3.4.3 Neighborhood Petitions and Cost Share – Exceptions – Special Material/Landscaping Request

1. Clarified the requirement for maintenance agreements for decorative elements.

Section 3.5.2 Review and Analysis of Applied Solutions – Re-Evaluation

1. Revised the review period to two (2) years for new applications.

<u>Section 4 – Traffic Impact Studies</u>

Section 4.1.1 Traffic Impact Study Requirements - General

1. Added requirement to submit the Traffic Impact Study with or before DRT plan submission.

Section 4.2.13 Traffic Impact Study Procedures and Criteria – Mitigation Thresholds and Measures

1. Added verbiage for waiver submittals.

<u>Section 5 – Roadway Design</u>

Section 5.6 Street Lighting

1. Added requirements for LED street lighting.

Section 5.6.2 Standard Decorative Fixtures

1. Clarified maintenance responsibility of the servicing authority.
2. Removed developer submitted lighting plans.

Section 5.6.3 Street Lighting – Specialized Decorative Fixtures

1. Changed the name of Section to “Light Plan Approvals”.
2. Revised the Developer and submittal requirements.

Section 5.6.4 Decorative Pedestrian Lighting

1. Clarified submittals.

Appendix K – Arterial Roads List

1. Removed U.S. Highway 280 and created new Highway Roads List.

Appendix L – Collector and Residential Collector Road List

1. Updated the List to include new streets.

Appendix M – Local Commercial / Local Streets/ Cul-De Sacs/Alleys List

1. Updated the List to include new streets.

Appendix O – Standard Drawings and Details

1. Reformatted all details to eliminate ambiguities.
2. Revised title to “Street Details and Standard Drawings”.
    a. Revised Sheet 9 (5.04): Header Curb Detail.
    b. Revised Sheet 13 (5.07): Driveway / Sidewalk Without Greenspace Detail.
    c. Revised Sheet 18 (5.14): Hand Rail Detail.
    d. Revised Sheet 34 (5.22): Tree Grate Detail.

Appendix R – Storm Sewer Standard Details

1. Reformatted all details to eliminate ambiguities.
    a. Revised Sheet 7 (7.12): Sloped Paved Headwall Detail.

This page intentionally left blank.

RESOLUTION NO. 24-033

WHEREAS, the City Council of the City of Auburn approved and adopted the Engineering Design and Construction Manual on November 2, 2010 with an effective date of January 1, 2011; and

WHEREAS, the City Engineer, in collaboration with the development community, finds it necessary to implement material changes (a copy of which is attached and made a part hereof) for clarification and to comply with rule changes in the industry and to make these changes effective March 1, 2024.

NOW THEREFORE, BE IT RESOLVED that the City Council of the City of Auburn, Alabama does hereby approve and accept the changes to the Engineering Design and Construction Manual effective March 1, 2024.

ADOPTED AND APPROVED by the City Council of the City of Auburn, Alabama, this the 20th day of February 2024.

Mayor

ATTEST:

City Manager

This page intentionally left blank.

Summary of Proposed Changes to the Engineering Design & Construction Manual
March 2024

Section 1 – General Information

Section 1.2.5 Definitions

1. Updated the Development Review Team (DRT) definition.

Section 1.3.4 Development Review Team (DRT)

1. Additional Permit Portal information has been provided.
2. The DRT review process timeframes have been revised.
3. Added a requirement to provide written comment responses.

Section 1.3.4.6 DRT Process Flowchart

1. The DRT process flowchart has been updated.

Appendix B-1 – DRT Checklist for Site Development Construction Plans

1. Modified a note related to trees near utilities.

Appendix B-2 – DRT Checklist for Subdivision Construction Plans

1. Modified a note related to trees near utilities.

Section 5 – Roadway Design

Section 5.2.4.1 Streets

1. Clarified when temporary turnarounds are required on street stub-outs.

Section 5.2.4.3 Sidewalks

1. References to PROWAG have been updated.
2. Added criteria for upsizing existing sidewalk for new or redevelopments.
3. Clarified that tree wells may be waived where there are no sidewalks.

Section 5.2.6.1 Design Criteria (Driveways)

1. Specified the maximum width for residential driveways.

Section 5.2.6.3 Driveway Spacing

1. Edited text for clarity.

Section 5.3.2.3 Islands

1. Clarified irrigation in the right-of-way.

Section 5.3.3 Sight Distance

1. Clarification was added for the design speed.

Section 5.3.7 Deceleration Lanes and Tapers

1. The overlay thickness was modified.

Section 5.3.8 Deceleration Lanes and Tapers

1. Text was removed to clarify turn lane requirements.

Section 5.6.4 Decorative Pedestrian Lighting

1. Specified red continuous-run conduit for lighting.

Appendix L – Collector and Residential Collector Road List

1. Updated the list to include new streets and remove streets no longer applicable.

Appendix O – Standard Drawings and Details

1. Detail 5.01
    a. Revised Driveway Cross Section.
    b. Revised shoulder width.
2. Detail 5.02 – Revised shoulder width.
3. Detail 5.06
    a. Made a grammatical correction.
    b. Updated the overlay thickness.
4. Detail 5.08 – Specified the maximum driveway width for residential uses.
5. Detail 5.12 – Updated the PROWAG reference.
6. Detail 5.14 – Added Black Powder Coat requirement for sidewalk guardrail.
7. Detail 5.35 – Made a grammatical correction.

Section 6 - Geotechnical

Section 6.3.4 Design and Safety Requirements

1. Changed Public Works Department to Engineering Services Department.

Section 7 – Drainage

Section 7.3.6.4 Minimum Clearances

1. Added text for clarification of vertical clearance minimums.

Section 7.4.5 Operation & Maintenance

1. Clarified recording of the Stormwater O & M Agreement.

Appendix R – Storm Sewer Details and Standard Drawings

1. Detail 7.08 – Added clarification to the HDPE note.

This page intentionally left blank.

RESOLUTION NO. 26-188

WHEREAS, the City Council of the City of Auburn approved and adopted the Engineering Design and Construction Manual on November 2, 2010, with an effective date of January 1, 2011; and

WHEREAS, the City Engineer, in collaboration with the development community, finds it necessary to implement material changes (Exhibit A, Exhibit B, Exhibit C attached and made a part hereof) for clarification and to comply with rule changes in the industry and to make these changes effective August 1, 2026.

NOW THEREFORE BE IT RESOLVED that the City Council of the City of Auburn, Alabama does hereby approve and accept the changes to the Engineering Design and Construction Manual effective August 1, 2026.

ADOPTED AND APPROVED by the City Council of the City of Auburn, Alabama, this the 21st day of July 2026.

Mayor

ATTEST:

City Manager

This page intentionally left blank.

Summary of Proposed Changes to the Engineering Design & Construction Manual
August 2026

Section 1 - General Information

Section 1.2.5 Definitions

1. Added a definition for Private Access Drive to correspond with recent modifications to the Subdivision Regulations.
2. Updated the definition for Subdivision Jurisdiction to reflect the current 1.5-mile planning jurisdiction.

Section 5 - Roadway Design

Section 5.2.4.3 Sidewalks

1. Revised language to refer to the new Streetscape Fund and removed reference to the Sidewalk Fund.
2. Added language to provide the option for payment into the Streetscape Fund in lieu of installing street trees in certain situations and added a reference to the new Streetscape Fund.

Section 5.3.5 Left and Right Turn Lanes

1. Revised language based on updated turn lane requirements criteria.

Section 5.3.5.1 Turn Lane Warrant Criteria (New Section)

1. This section was created as part of the updated turn lane requirements.

Section 5.3.5.2 Turn Lane Design Standards (New Section)

1. This section was created as part of the updated turn lane requirements.

Section 5.3.5.3 Left Turn Lanes on Divided Roadways

1. This was previously Section 5.3.8 and is being consolidated under Section 5.3.5.
2. Language regarding modification of medians was updated to fix a conflict with related language in another section of the manual.

Section 5.3.6 Right Turn Lane Warrants (Modified and Relocated)

1. The language in this section was modified based on the updated turn lane requirements and consolidated as a sub-section within Section 5.3.5.

Section 5.3.7 Deceleration Lanes and Tapers (Modified and Relocated)

1. The language in this section was modified based on the updated turn lane requirements and consolidated under Section 5.3.5.

Section 5.3.8 Left Turn Lanes on Divided Roadways (Modified and Relocated)

1. This section was consolidated as a sub-section within Section 5.3.5.

Section 5.4.2.2 Open Cut Installation

1. Added language requiring open-cut utility installation to be done at night or during off-peak times in certain situations.

Section 5.4.2.3 Bore Installation

1. Added a reference to Section 5.4.2.2 for clarity.

Section 5.6.4 Decorative Pedestrian Lighting

1. Added reference to the new Streetscape Fund section.

Section 5.8 Right-of-Way Plantings

1. Added reference to the new Streetscape Fund section.

Section 5.10 Construction

1. Updated the number of years that outstanding improvements can carry over from 2 years to 4 years to match the current language in the Subdivision Regulations.
2. Updated the language to generally require that the wearing surface and remaining infrastructure items be installed no later than 90% buildout of the development.

Section 5.13 Streetscape Improvements Fund (New Section)

1. Added language describing the purpose, intent, and application of the Streetscape Improvements Fund.

Section 5.14 Transportation Improvements Fund (New Section)

1. Added language describing the purpose, intent, and application of the Transportation Improvements Fund.

Appendix P-5 Turn Lane Requirements by Roadway

1. Appendix P-5 is a new map that visually indicates sections of roadways falling into the three primary categories of the updated turn lane requirement criteria.

SECTION 2

2.0 TRAFFIC SIGNAL DESIGN GUIDELINES

2.1 SIGNAL DESIGN ELEMENTS

Any traffic signal proposed for installation on City streets shall meet the minimum criteria as outlined in the *Manual on Uniform Traffic Control Devices* (MUTCD) and the Alabama Department of Transportation (ALDOT) *Traffic Signal Design Guide & Timing Manual*, latest editions. Additionally, traffic signals proposed for installation on City streets may only be considered at locations where their spacing from existing signals would not deteriorate roadway capacity along the street. A request for traffic signalization shall address the minimum criteria for installation as well as the roadway capacity impacts created by signal spacing. A development may be responsible for all or part of any right-of-way, design, hardware, and construction costs of a traffic signal if it is determined that the signal is warranted by the traffic generated from the development. The procedures for traffic signal installation shall be in accordance with criteria established by the MUTCD and ALDOT, as applicable.

2.1.1 Signal Heads

All signal lenses shall be DIALIGHT (or approved equal) twelve (12) inch LED balls with a quick disconnect feature utilizing a fork terminal end for termination purposes. The LED lenses shall be wired to a terminal block located in the yellow lens housing. The LED lenses shall be installed in a yellow aluminum signal head housing with yellow aluminum tunnel visors. Back plates are typically not required on City signals unless a visibility problem exists. Back plates are required by ALDOT on all State routes. All mounting hardware for mast arm traffic signals shall be black Pelco articulating cable mount brackets. All mounting hardware for span wire traffic signals shall be aluminum tri-stud hanger assemblies. Signal wire for mast arm intersections shall enter through the bracket and not be externally exposed.

Signal head placement shall adhere to the standards set forth in the MUTCD, latest edition. A minimum of two (2) signal faces shall be provided for the major movement on each approach, even if the major movement is a turning movement. If the signal faces provided on the mast arm or span wire are more than one hundred eighty (180) feet beyond the stop line, a supplemental near side signal face shall be installed as required by the MUTCD. Where dual left turn lanes are provided, a separate left turn face shall be provided for each lane.

Lateral positioning of signal heads shall be in accordance with the guidelines established in the latest edition of the MUTCD. Adjacent signal faces on the same mast arm or span wire shall be placed no closer than eight (8) feet apart. The placement of the signal head over the roadway shall be such as to provide a minimum seventeen (17) foot vertical clearance from the bottom of the signal head to the roadway.

2.1.2 Signal Supports

All signal supports shall be decorative mast arms unless approved by the City Engineer. All mast arm signal poles shall be smooth, round poles with an arched mast arm and a powder

coated gloss black (P-33) finish. Poles are to be assembled with the ornamental pole base and ornamental pole top per the City standards. The factory finish on the ornamental ball on pole top shall be gloss black on all assemblies.

Strain poles and mast arm poles should be located as far as practical off the edge of roadway while staying within the right-of-way. Additionally, the poles shall be located to maximize the separation between the foundation and existing utilities. The location of strain poles and mast arm poles shall be in compliance with the AASHTO *Roadside Design Guide* and ALDOT standards, and approved by the City Engineer.

2.1.3 Cabinet and Controller Equipment

The standard controller to be used at all signalized intersections shall be an Eagle or approved equal 16-phase, NEMA-compatible controller that meets current ALDOT standards and specifications. The controller shall be capable of internally remapping outputs to facilitate FYA operation in both standard and compact modes. Controller cabinets shall be 16-phase powder coated gloss black ground mounted cabinets with railroad preemption and remote traffic signal override cord, unless otherwise approved by the City Engineer. The controller cabinet shall be so oriented that the traffic personnel will be facing the intersection while looking in the cabinet. Controller cabinets should be located as far as practical off the edge of the roadway and in the same intersection quadrant as the power source. Cabinet shall have integrated UPS cabinet unless approved by Traffic Engineer. All cabinet components and controller shall be capable of operation with flashing yellow arrow sequencing. All cabinet pedestals shall be constructed with a spare 2" conduit stubbed out for future use.

All new cabinet facilities, including upgrades to existing locations, shall be equipped with status monitoring through the Glance service from Applied Information. As applicable to the location or if specified by the Traffic Engineer, this may also require additional Glance features, including Preemption and Data Pass-through (Controller communications, Video, MMU).

2.1.4 Communications

Signal interconnect provides communication between two (2) or more individual traffic signals to provide coordination of signals. Legacy communication types at existing locations include hardwire, twisted pair, closed-loop and serial radio. New installations shall use Cellular or fiber Ethernet to provide communications for controllers and for other network-capable devices in each location. Other types of communication may be considered and approved at the discretion of the City Engineer. When an intersection with existing communications equipment is modified or upgraded, the existing communication equipment shall be reinstalled in the newly completed signalized intersection and fully functional unless new communication equipment is specified in the project plans and documents.

2.1.4.1 Extension of Existing System

If a new signal is to be added to an existing hardwire connection, a local controller with adequate cabinet space for an interconnect panel must be designated as the system supervisor. If the signal modifications are significant, the replacement of the hardwire systems with a more advanced interconnect system may be necessary.

To connect a new signal with an existing twisted pair connection, a local controller must be designated as the system supervisor and communications boards must be installed in each controller.

If a new signal is to be added to an existing closed-loop system or if an existing communication system is being upgraded to a closed-loop system, all controllers must be of the same make or all controllers must be upgraded.

2.1.4.2 New System Implementation

New signal installations shall require the inclusion of network communication infrastructure to allow management of the signal controller from the City's existing Traffic Management System. In locations where the City maintains existing fiber optic infrastructure, fiber Ethernet network equipment shall be provided. Ethernet Field Switch shall be RuggedComm Model No RS900G. In all other locations, the Data Pass-through services from Glance (see section 2.1.4 above) shall be utilized to provide communication to all networkable devices.

2.1.5 Signal Wiring, Conduit and Junction Boxes

All signal head wiring is required to be seven (7) conductor stranded, regardless of signal head (3-, 4- or 5- section heads).Wiring from cabinet to signal heads should have no joints. Terminations are to be made in signal heads and cabinets only. Any changes to an existing intersection with solid wiring will require complete re-wire of all components using stranded cable. At existing span wire intersections, removal of existing lashing may be required when new wire is added. Adding new wire over existing lashed wire shall not be permitted unless old lashing is removed. Lashing shall be aluminum lashing tape only. For Flashing Yellow Arrow (FYA) signal installations, signal head wiring is required to be ten (10) conductor stranded. Four (4) conductor shall be used to connect the from the FYA head to the concurrent phase 3-section signal heads. The following wiring standard should be used until IMSA or ALDOT standards are developed.

Conductor #	Wire color	Signal indication
1	Black	Yellow ball
2	White	Neutral
3	Red	Red ball
4	Green	Green ball
5	Orange	Yellow arrow
6	Blue	Green arrow
7	White with black stripe	SPARE
8	Red with black stripe	FYA red arrow
9	Green with black stripe	SPARE
10	Orange with black stripe	FYA yellow arrow

A minimum of two (2) – 2″ conduit are required for signal cable from the controller cabinet under roadways. Two (2) – 2″ conduit is also required for signal cable and loop returns, once the run has crossed the roadway. All above ground conduit is required to be rigid metallic, while PVC Schedule 40 conduit is the standard for trenched underground conduit and continuous run HDPE conduit is the standard for underground bored conduit. A spare 2″ conduit shall be stubbed out of each pole foundation and the cabinet pedestal for future use.

Traffic rated junction boxes of a minimum size of 17″x 30″ and minimum Tier 15 rating are required for all installations throughout the City, regardless of location within the right-of-way. Junction box lids shall have "traffic" molded into the lid. Any joints within underground junction boxes shall be water-tight connectors and approved by the Traffic Engineer.

2.1.6 Power Supply

The electrical power source for the controller cabinet shall be underground. It shall be designated on signal plans in the same quadrant as the signal controller. The power source should be verified by the engineer in the field with a representative of the power company before the power source is located on the plans. The service disconnect shall be black and constructed in accordance with the standard detail shown in Appendix H. All conduit, wire, bonding, and other required miscellaneous components shall be internally routed in pole. Any charges imposed by the utility company for service shall be paid by the project contractor or signal contractor.

An uninterruptible power system (UPS) (battery back-up system Clary SP 1250LX or approved equal) is required for all intersections. The entire UPS system and batteries shall be housed in the traffic signal controller cabinet with integrated UPS cabinet. When added to an existing cabinet without space for the UPS, the UPS and batteries shall be housed in a 336S cabinet. The UPS shall use the OP72C battery. Aesthetics should be considered when designing the location and style of the power service supply and disconnect to maintain the standard established by the decorative black poles.

2.1.7 Vehicle Detection

The type of vehicle detector used depends upon the type of information needed by the controller to operate efficiently at its location with respect to the roadway. There are two (2) types of inductive loop detectors, as well as video detection, which are acceptable for use within the City. The type of detection used at each intersection shall be approved by the City Engineer. Video detection shall be required at all new or improved intersections. Other types of detection may be considered and approved at the discretion of the City Engineer. All detection, regardless of type, shall be capable of obtaining and providing volume data via the mesh network and shall detect and respond to the presence of bicycles.

The inductive loop detects vehicles by sensing a change of inductance in the loop caused by the passage or presence of a vehicle over the loop. This type of detection is made up of three (3) components: a loop of wire sawcut into the roadway surface, a lead-in (home run) cable and an amplifier unit in the controller cabinet. It is capable of both passage and presence detection. All loops sawcut into the road way shall have individual homerun cables and individual curb side cut outs. Loops shall be installed and tested in accordance with ALDOT

Standard Specification 730(p). Testing results for each loop shall be provided to the Traffic Engineer for approval.

Video detection utilizes video cameras and an image processor to detect the presence of a vehicle to determine when to activate a particular phase.

2.1.7.1 Stop Line Detection

Stop line detection, as the name implies, are inductive loops located at or near the stop line on an intersection approach to detect the presence of stopped vehicles and operate in the presence (non-locking memory) mode of detection. Stop line detection is typically used on low speed [twenty-five (25) mph or less] and side street approaches. They are typically used in through lanes on minor approaches (at a minimum), in left turn lanes on both major and minor approaches and across bicycle lanes. When used with a delay, stop line detectors can screen out right turns made on red, or left turns clipping opposing lanes, thus preventing false calls.

The standard size loop is six (6) feet by forty (40) feet regardless of lane widths. At large radius intersections, wider loops may be used. The width of the loop in a curbside lane can increase significantly when it is located ten (10) feet back from a cross street and the intersection has large curb radii.

2.1.7.2 Advanced Detection

Advanced detection are inductive loops that can be used with volume density controllers and are located some distance in advance of the approach stop line. The advanced loop is six (6) feet by six (6) feet and located in the through lanes of the major street where speeds are thirty (30) mph or greater. These loops operate in a passage or pulse mode and detect vehicles as they pass a specific point. Advanced loop detection can provide the controller with information on vehicles approaching the intersection, and in the case of a volume density controller, can count the number of vehicles on the approach that are waiting with a red signal indication. The location of these loops is based on the safe stopping distance of approaching vehicles which varies according to the approach speed.

TABLE 2.1
Advanced Detector Location

Approach Speed	Loop Setback
30 mph	140’
35 mph	185’
40 mph	230’
45 mph	285’
50 mph	340’
55 mph	405’

Source: ITE *Manual of Traffic Signal Design*, 2nd Edition

2.1.7.3 Video Detection

Video detection can operate in both presence and passage mode, similar to stop line and advanced detection. Detection zones are designated in the image processor to detect the presence of a vehicle and a bicycle and send a call to the controller. Video detection is often used in place of stop line detection, but can also be used for advanced detection (may

require cameras downstream of the intersection). If the intersection cameras cannot detect advancing vehicles because of the topography and additional downstream cameras are not feasible, advanced loops may be necessary.

The latest model color Ieteris camera and VRack (mounting rack) or approved equal are required at all intersections operating with a video detection system. Video detection shall be routed back to the Traffic Management System utilizing Edge Connect Modules. Cameras are to be mounted on a mast arm on the far side of the intersection. Proper mounting height is necessary, and varies by location, to ensure the cameras have an acceptable field of vision. ALDOT recommends mounting heights from thirty (30) to forty-two (42) feet. Engineering judgment is required to determine the ultimate mounting location. All cameras and mounting hardware for video detection shall be black. Powder coated black cable mount brackets shall be used for mounting.

2.1.7.4 Wireless Detection

Wireless detection shall be compatible with and interchangeable with the existing wireless systems provided by Sensys Networks.

2.1.8 Railroad Pre-Emption

The MUTCD states that railroad pre-emption shall be provided whenever the distance between a rail crossing and traffic signal is two hundred (200) feet or less. Additional warrants include:

- Analysis that indicates vehicle queues from a traffic signal have the potential to extend into or past the rail crossing, and
- Analysis that indicates vehicle queues caused by a passing train have the potential to extend into the signalized intersection and obstruct traffic flow.

The maximum [ninety-five (95%) percent] queue is recommended to be used when determining whether the queue will extend into the track area [within eight (8) feet of the nearest rail]. Refer to ALDOT's *Traffic Signal Design Guide & Timing Manual* for the standard pre-emption sequence and guidelines for computing the minimum interval times.

2.1.9 Intersection Signage

This section presents only the most commonly required signing associated with traffic signals. Guidance for additional signing may be found in the MUTCD, latest edition.

Spanwire/Mast arm mounted sign arrangements shall be installed in conformance with the MUTCD, latest edition. Where overhead signs are installed, they shall have a minimum of seventeen (17) foot vertical clearance over the roadway. Examples of these signs include:

1. Left Turn Signal Signs R10-10, R10-12,
2. Lane Control Signs R3-5 through R3-6a,
3. Turn Prohibition Signs R3-1, R3-2, R3-4, R10-5, R10-11a,
4. Street Name Signs D3-1.

Ground mounted signs to be used at or in advance of signalized intersections shall be installed in conformance with the MUTCD, latest edition. Examples of these signs include:

1. Turn Lane Supplemental Sign R3-7,
2. Signal Ahead Sign W3-3,
3. Street Name Signs D3-2.

Street name signs shall be LED internally edge lit illuminated signs with high intensity prismatic white letter on the standard City of Auburn blue background. They shall be equipped with flip front faces for field maintenance. Frames shall be gloss black in color. All mounting hardware for illuminated signs shall be black under-hang brackets for use with two-sided signs. Each individual sign shall be fused at the base of the pole unless otherwise approved by the Traffic Engineer. Power for the illuminated signs shall be served from the luminaire circuit at the base of the corresponding pole. One black photoelectric cell shall be located on the bottom of the disconnect to control both signs.

Traffic control signs used at signalized intersections in the City shall be high intensity prismatic and of the size specified in the MUTCD. The unit measurement for these signs as shown in signal plans shall be in square feet of sign face.

2.1.10 Pedestrian Signal

Pedestrian signals shall be LED countdown signal heads (Lumination PS7-CFF1-01A-18), with a "walking person" indication and a "flashing/steady upraised hand". Audible devices shall also be installed to provide standard information about the status of the signal cycle to pedestrians with disabilities. Pedestrian signal housing shall have a gloss black finish. All mounting hardware for pedestrian signal heads shall be black clam-shell brackets drilled and tapped to the pole.

Pedestrian push buttons shall be provided on their own individual poles on the appropriate approach with an audible push button for each crossing direction. Pedestrian push button poles shall be installed in accordance with the standard detail shown in Appendix H. Pedestrian push buttons shall be POLERA Navigator (or approved equal) compliant with Public Rights-of-Way Accessibility Guidelines' (PROWAG) issued by the United States Access Board. Each push button is to be supplemented by sign R10-3i, which includes the street name of the street to be crossed with an arrow pointing in the direction of the crossing. The street name shall also be identified in Braille. Audible push button programming shall be implemented in accordance with the latest edition of the MUTCD including all individual street names and messages. Standard Polera settings for volume and tones may be obtained from the Traffic Engineering Department.

All pedestrian signal head wiring shall be five (5) conductor stranded. Two (2) conductor stranded 50-2 wire is required for pedestrian push buttons. The following wiring standard shall be used:

Wire Color	Termination
Red	Pedestrian Head "Don't Walk"
Green	Pedestrian Head "Walk"
White	Pedestrian Head Neutral
Black	Pedestrian Push Button Positive (+)
Orange	Pedestrian Push Button Negative (-)

The pedestrian signal phase is a special sequence actuated by pedestrian push buttons to allow pedestrians to safely cross a street.

2.1.10.1 Warrants

A pedestrian signal phase with pedestrian signal heads shall be installed when any of the following occur:

1. When Signal Warrant 4, "Pedestrian Volume" is fulfilled,
2. When Signal Warrant 5, "School Crossing" is fulfilled,
3. Where there is an established school crossing at the proposed signal location,
4. Where pedestrians are present and multiphase signal operations (lead-lag left turns, split phasing, etc.) are used that could confuse the pedestrians,
5. Where a sidewalk approaches the intersection on opposite sides of the intersection and on the same side of the street.
6. As required by the City Engineer.

2.1.10.2 Sequence

The most commonly used sequence is to move pedestrians concurrent with parallel vehicular traffic. Care must be taken however not to move pedestrians during the display of a conflicting left turn or right turn arrow for the parallel vehicular traffic. The exclusive movement sequence moves pedestrians on a phase totally separate from any vehicular phase. When used, pedestrians cross all approaches simultaneously. This sequence should only be used where both pedestrian volumes and conflicting vehicular turning movement volumes are high.

2.1.10.3 Timing

Walk timing provides the time necessary for a pedestrian to leave the curb to cross the street. Its minimum setting ranges from three (3) to seven (7) seconds. Pedestrian clearance time shall be calculated utilizing the latest edition of the MUTCD. It is calculated using the equation:

$$PC = W / V_P$$

Where: PC = Pedestrian Clearance (sec)
W = Width of street (ft)
V_P = Pedestrian walking speed (see MUTCD latest edition)

A portion of the pedestrian clearance interval can be timed simultaneously with the yellow and all red intervals of the concurrent vehicular phase.

2.1.11 Intersection Lighting

A twelve (12) foot luminaire arm with a Phillips Roadstar 130 130W98LED4K (or approved equal) cobra head fixture shall be installed on all traffic signal poles at the intersections. Luminaire assembly shall be painted with a gloss black finish and include an equivalent to a two hundred fifty (250) watt high pressure sodium fixture. Each fixture shall be individually fused at the base of the pole. All luminaires shall be controlled by individual photocells located at each luminaire housing.

2.2 SIGNAL TIMING

Traffic signal timings shall be developed in accordance with the criteria established by the MUTCD, Federal Highway Administration (FHWA) *Traffic Signal Timing Manual* and the ALDOT *Traffic Signal Design Guide & Timing Manual*, latest editions. The engineer should consult with the City Traffic Engineer to determine whether a traffic signal will operate as actuated. Fixed time signals are often used in the downtown area and on low volume roads. Actuated signals with a fixed cycle length are more commonly used.

2.2.1 Cycle Lengths

Signal cycle length is the total time required to complete one (1) sequence of signal phases and generally should be as short as possible. Table 2.2 "Typical Cycle Length Ranges" contains guidelines regarding typical cycle length ranges. Cycle lengths should be calculated for the A.M. peak hour, the P.M. peak hour and off peak periods, as a minimum. If the cycle lengths vary by more than ten (10) seconds, each period should operate on a different cycle length. Signal timing software should be utilized to determine optimum cycle lengths.

TABLE 2.2
Typical Cycle Length Ranges

Traffic Volumes	Typical Cycle Length Range
Low	50 – 90 sec.
Moderate/High	90 – 130 sec.
Congested	130 – 180 sec.

Source: ALDOT *Traffic Signal Design Guide and Timing Manual*, November 2007

2.2.2 Actuated Timing Parameters

The following timing parameters are for stop line detection of an actuated signal: minimum green, vehicle extension (passage time), maximum green (I and II), yellow all red, walk and pedestrian clearance. The following timing parameters are for advanced detection of a volume density signal controller. These features are typically used for approach speeds thirty (30) mph or greater and provide a variable (minimum) green as well as a variable "gap" feature. The timing parameters are: minimum initial (minimum green), added initial, initial gap (passage time), time before reduction, time to reduce, minimum gap, maximum green (I and II), yellow, all red, walk and pedestrian clearance.

2.2.3 Signal Timing Plans

A signal timing plan is the combination of cycle length, phasing, splits (green + clearance for each phase) and offsets (for coordinated systems) and should be included with traffic signal plans. When the signal is part of a coordinated system, the signal shall be incorporated into the existing coordinated system timing plans. New coordinated system timings shall be required for all signals within the system when necessary to incorporate new signals or geometric improvements.

2.3 PLANS PRODUCTION

A Traffic Signal Plans Submittal Checklist has been provided in Appendix F to facilitate a more efficient plan review process for the designer and the review team. The checklist must be submitted with every set of plans for traffic signal improvements or new signal installations. The various signal plan sheets, their format and contents are described in this section. At a minimum, all plan sheets shall have a title block containing the intersection or corridor name, a scale, the design date and the design firm information, including the initials of the designer. The title sheet shall be stamped, signed, and dated by the engineer of record that supervised the design and plans production.

2.3.1 Traffic Signal Notes

This sheet contains, as the name implies, notes of general nature that apply to all the signalized intersections in the plans. It generally includes items from the ALDOT Standard Specifications for Highway Construction (latest edition) for which emphasis is intended for the contractor. The most frequently used notes are shown in Appendix G.

2.3.2 Signal Plan

Signal plan sheets shall illustrate the basic intersection geometry, channelization, driveways, ditches, right-of-way, the location of underground and aerial utilities, utility poles, pavement markings, construction stationing (if available), and the power source for the controller cabinet.

The following information concerning the timing, phasing and installation of the signal is also required on the signal plan sheet.

2.3.2.1 Installation Notes

This set of notes applies to the signal installation at a particular intersection only. It should not repeat notes covered in the signal general notes section. Items typically covered in these notes include but are not limited to:

- Signal Controller/Cabinet – Specifies installation and type
- Electrical Service – Specifies installation
- Junction Boxes – Specifies installation and type
- Signal detectors – Specifies installation
- References – Refers to the signal General Notes and the signal timing and operations sheets for additional information
- Speed Limits – Posted speed limits on all intersection approaches
- Flashing Operations – Yellow to major street, red to minor street.

2.3.2.2 Signal Head Displays

This diagram shows the signal indication arrangement for each head on the signal plan. It also specifies the signal indication lens size twelve (12) inches and signal head housing color (yellow).

2.3.2.3 Signage Displays

This diagram shows the sign type, MUTCD designation and size for each sign called for on the signal plans. If a non-standard sign, such as a street name sign, is called for, its size, color and legend must be specified.

2.3.2.4 Pre-Emption Phasing Diagram

If emergency or railroad pre-emption is included in the signal design, a pre-emption phasing diagram is needed to show all the phasing sequences possible when the signal is pre-empted. The phase in which normal operations is to resume after pre-emption is to be designated. Normally pre-emption is limited to major roadways and not side streets. Exceptions would be if there was a fire/EMS station or hospital located on the side street.

2.3.2.5 Signal Sequence Chart

This table contains all the timing parameters applicable for the type of signal specified in the plans. The timing is shown for each signal phase in addition to its recall status.

2.3.2.6 Conflict Monitor Chart

The conflict monitor chart contains the permissible or safe phase combinations to be hardwired into the conflict monitor. Any combination not wired into the circuit board will trip the conflict monitor and place the signal into flash mode.

2.3.2.7 Wiring Diagram and Table

The wiring diagram shows the wiring required to accommodate the signal heads, detectors, signal controllers and power source for the signal installation shown on the signal plan. For clarity purposes, the combination of conductors required in each different section of the wiring diagram may be designated with a letter code corresponding to a wiring combination shown in the wiring table.

The wiring table is a chart that describes the various conductor combinations as designated by the letter code on the wiring diagram. The wiring code should include all runs both aerial and underground. It also specifies the conduit size needed for each particular combination of conductors run underground.

2.3.2.8 Materials List

This chart shall list the components of the signal equipment that are covered under the 730 "Furnishing and Installing Traffic Control Unit" pay item. Computed quantities are not necessary as they are part of a lump sum pay item. The following items, as applicable, should be listed in a box on the plan sheet:

- 3/8" messenger cable
- 1/4" tether wire
- #14 signal cable
- Power source (specify 120V or 240V)
- Miscellaneous hardware
- Span mounted signs with hardware (ex. R10-12, R10-10, etc.)
- Backplates with hardware
- Weatherheads
- Pedestrian signal displays

- Pedestrian pushbutton assemblies.

2.3.3 Details and Standard Drawings

The traffic signal plans shall also include all standard details, drawings and specifications as applicable to the signal design. This includes, but it not limited to the City's Standard Decorative Pole Assembly and the applicable ALDOT Traffic Signal Operating Plan. Typical details, drawings and specifications are provided in Appendix H of this Manual.

2.3.4 Communication Plan

A communication or interconnect plan shall be required if a traffic signal is being coordinated with other signal installations, via hardwire, radio, fiber optic or other. The plan shall illustrate required equipment such as master controllers, and the placement of communication cable, either underground or aerial, and tabulate all related interconnect quantities. The communication plan sheet shall indicate all signal and/or utility poles to which communication cable will be attached. In the case of radio coordination, the plan shall illustrate all necessary antennae, master controllers or other required equipment.

2.4 CONSTRUCTION

A certified Traffic Signal Technician shall have active involvement with all work required for the installation and operational testing of electrical materials and equipment (conduit, boxes, conductors, etc.). A pre-construction meeting is required prior to any work on existing or new traffic signals. The developer, general contractor, and/or electrical contractor(s) performing the work are required to be in attendance. This meeting may be held in conjunction with the project preconstruction meeting or as a stand-alone meeting.

All installations shall comply with the regulations of the National Electrical Code and the National Electrical Safety Code, latest editions, and with the service rules of the electric service provider. Prior to beginning work, contractors shall provide at least 48 hours notification to the Traffic Engineering Department.

In the case of a signal upgrade, existing equipment that is not in operation at the project site shall be returned to the Engineering Services Department.

2.4.1 Materials Submittal

Equipment shop drawings and manuals must be submitted to the City for approval before materials are ordered. All materials furnished for use shall conform to the requirements given in the ALDOT Standard Specifications for Highway Construction, latest edition. Materials shall also comply with requirements that may be given on the plans. Concrete for foundations shall comply with the requirements for Class A, Type 2a concrete. Reinforcing steel shall meet the requirements for steel reinforcement and shall be Grade 60 (400) billet steel. Minimum design wind speed shall be based on ALDOT standards. All materials and equipment furnished shall be new, except when the plans specifically provide for the re-use of existing equipment.

2.4.2 Test Requirements

Before the installation of a traffic control systems, the contractor shall perform a pre-installation test. This test shall include the bench testing of all controllers, signals, detectors, etc., under signal load conditions for fourteen (14) consecutive days. The contractor shall secure an acceptable site, approved by the engineer, for the bench test and shall perform all work required in the performance of the test. The contractor shall notify the engineer of the date that the test is to begin a minimum of seven (7) days before that date. None of the equipment shall be installed on the project until the bench test has been completed and the contractor has submitted a letter to the engineer certifying that the equipment performed satisfactorily during the test. The engineer may shorten the length of time required for the bench testing. There will be no direct payment to the contractor for the cost of the pre-installation test including the cost of a suitable test site and the setting up of equipment for the test.

2.4.3 Inspection

Some materials and equipment required to be furnished will be standard production type products. Acceptance will be made by the engineer based on selected confirmation tests, the manufacturer's certification of the materials and equipment, and visual inspection at the job

site. The manufacturer shall make available to the City Engineer test data and material samples from the production runs for use in evaluation of these items. Approved devices are shown on ALDOT's Approved Traffic Control Devices and Materials list.
Concrete pole foundations shall be inspected by the Traffic Engineering Division before and after concrete is poured. Upon completion of the project, the contractor shall schedule a full operations traffic signal inspection with the Traffic Engineering Department. Results of the inspection shall be provided to the contractor in the form of a punch list. All items on the punch list must be satisfactorily addressed prior to releasing payment. Contractor shall give at least one day's notification for inspections.

2.4.4 Closeout

After all equipment has been installed and the operational check has been instigated, the contractor shall submit a set of plans showing in detail all changes on construction from the original plan details with special notation given to conduit location and elevation and schematic circuit diagrams. Operation manuals and as-built wiring diagrams shall be furnished for all equipment and accessories required in the controller cabinet. These manuals and wiring diagrams shall be mounted to the cabinet in an appropriate manner.

This page intentionally left blank.

APPENDIX F. Traffic Signal Plans Submittal Checklist

This page intentionally left blank.

City of Auburn

City of Auburn Traffic Signal Plans Submittal Checklist

This checklist must be submitted with every set of plans for traffic signals improvements. All items on the checklist shall be addressed. If the item is not applicable to this project check the box next to the item labeled "N/A", and provide comment. Items preceded by an asterisk (*) are required for the submittal to be considered complete. If one of these items is missing from the submittal without a valid explanation, the entire submittal will be rejected. Note that this checklist is not intended to be all-inclusive, and fulfillment of this checklist does not alleviate the obligation of the designer to meet all City of Auburn code, regulations, ordinances, and specifications. The purpose of this checklist is to facilitate a more efficient plan review process for the designer and the review team.

	Description	Check	N/A	Comments
	Required Plan Sheets			
	These are the basic sheets we expect to see in a set of plans. Some sheets may be combined on certain projects, or have different names (for example, storm water profiles shown on the street plan & profile sheets).			
*	Traffic Signal Notes Sheet			
*	Signal Plan Sheets			
*	Installation Notes			
*	Standard Details and Drawings Sheets			
*	Coordination Plan Sheets			
	Signal Support			
Signal Support - Signal Suppor	Galvanized Steel Poles			
	Powder Coat Gloss Black finish			
	Smooth Pole (not fluted)			
	Smooth, Arched Mast Arm			
	Gloss Black Decorative Top included			
	Gloss Black Decorative Base included			
	Black Ball on Decorative top			
	Cabinet			
Cabinet	Auburn Spec Cabinet (not ALDOT)			
	Painted Black			
	UPS included			
	8-Phase NEMA Compatible Controller included			
	Ground Mounted Cabinet			
	Interconnect Components specified			
	Preemption Requirements specified			
	Power Supply			
Power supply - P	Underground Service designed			
	Future Service Corner/Disconnect Location shown			
	Verified with ALPCo			
	Show existing topography with clearly labeled contours lines			
	Signal Heads			
Signal H	Yellow, Aluminum, 12inch signal heads			
	Gelcore ELD specified			
	Pedestrian Signals			
Pedestrian Signal	Black, Aluminum heads			
	LED			
	Countdown style			
	Audible pedestrian buttons			
	Signage			
Signage	Overhead Blue Street Name Signs specified			
	Overhead Turn Signs specified			
	Overhead Lane Control Signs required			
	Signal Ahead Signs required			
	Luminaries			
Luminaries	Black, 250 W HPS over each stop bar			
	Cut-off style Cobra Head Fixutre			
	12' Luminaire Arm			
	Plans			
s-Plans-Plans	Traffic Signal Notes Sheet			
	Signal Plan Sheets			
	intersection geometry shown			
	utilities shown			
	pavement markings shown			
	right of way shown			
	Installation Notes Specified for the following:			
	controller/cabinet specs			

	Description	Check	N/A	Comments
Plans-Plans-Plans-Plans-Plans-Plans-Plans-Plans-Plans-Plan	electrical service			
	junction boxes			
	detection			
	references			
	speed limits			
	flash pattern			
	Signal Head Display shown			
	Detection shown (cameras on mast arms)			
	Signage Display shown			
	Pre-emption phasing diagram shown			
	signal sequence chart included			
	conflict monitor chart included			
	wiring diagram and table included			
	materials list included			
	timing plan provided			
	Standard Details and Drawings Sheets			
	Coordination Plan Sheets			
Construction				
Construction	Materials Submittals included for the following:			
	pole design			
	pole foundation designs			
	cabinet and controller equipment			
	signal heads and mounting hardware			
	pedestrian heads and mounting hardware			
	testing reports			

SIGNED: _____
(engineer of record)

ENGINEER'S SEAL:

APPENDIX G. Traffic Signal Notes

This page intentionally left blank.

APPENDIX G. Traffic Signal Notes

Pavement markings shown are for illustrative purposes unless otherwise noted.

Controller shall be capable of running pedestrian phases.

Mast arm pole shall be galvanized steel, smooth, round poles (not fluted) with an arched mast arm and a powder coated gloss black (P33) finish.

The contractor shall not order the traffic signal material until the shop drawings and design calculations have been reviewed by the City of Auburn and written approval granted.

Poles shall include ornamental pole base and top as per City of Auburn standard.

Ball at top of crown shall be black.

The traffic signal pole assembly includes the pole structure, mast arm, decorative pole base, decorative pole top, luminaire arm and assembly, and miscellaneous hardware incidentals for a complete mast arm pole installation.

Cost of mast arm installation shall include all miscellaneous items, such as washers, bolts and all incidental items to have a complete installation.

Signal heads shall have a minimum clearance of 17′ from the bottom of the signal head to the roadway.

Signal heads shall be yellow.

Signal heads shall be 12″ LED's.

Luminaire assembly shall be gloss black Phillips Roadstar 130W98LED4K or approved equal.

Pedestrian signal housing shall be gloss black.

Pedestrian signals shall be led countdown signal heads (Lumination PS7-CFF1-01A-18).

Pedestrian pole shall be Holophane Wadsworth Aluminum Sitelink pole (or approved equal) with a powder coated gloss black finish.

Pedestrian signal head clamshell bracket shall be bolted to the pole, not banded.

Uninterruptable power systems (battery back-up systems Clary SP 1000SN+) using the OP72C battery are required for all intersections. The entire ups system and batteries shall be housed in the standard City of Auburn traffic signal controller cabinet unless otherwise approved.

This page intentionally left blank.

APPENDIX H. Signal Details and Standard Drawings

This page intentionally left blank.

DECORATIVE MAST ARM DETAILS

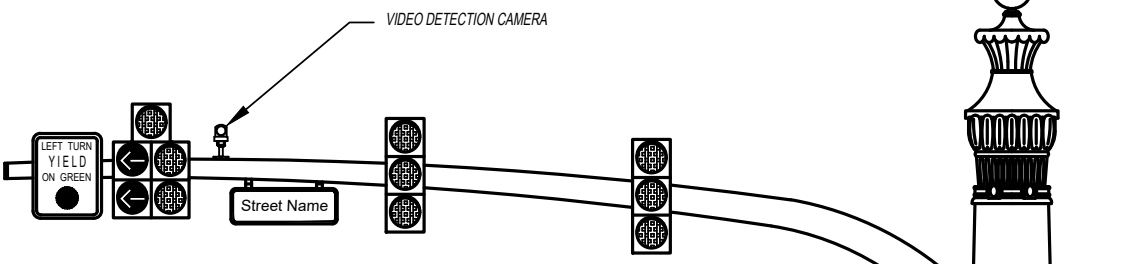

TYPICAL BEST ALIGNMENT FOR SIGNAL MAST ARM INSTALLATION IS LINING UP THE CAMERA IN LINE WITH THE LANE LINE BETWEEN THE LEFT TURN AND THROUGH LANES LEFT TURN DETECTION.

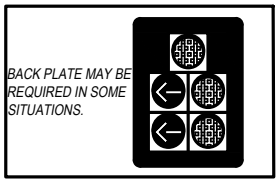

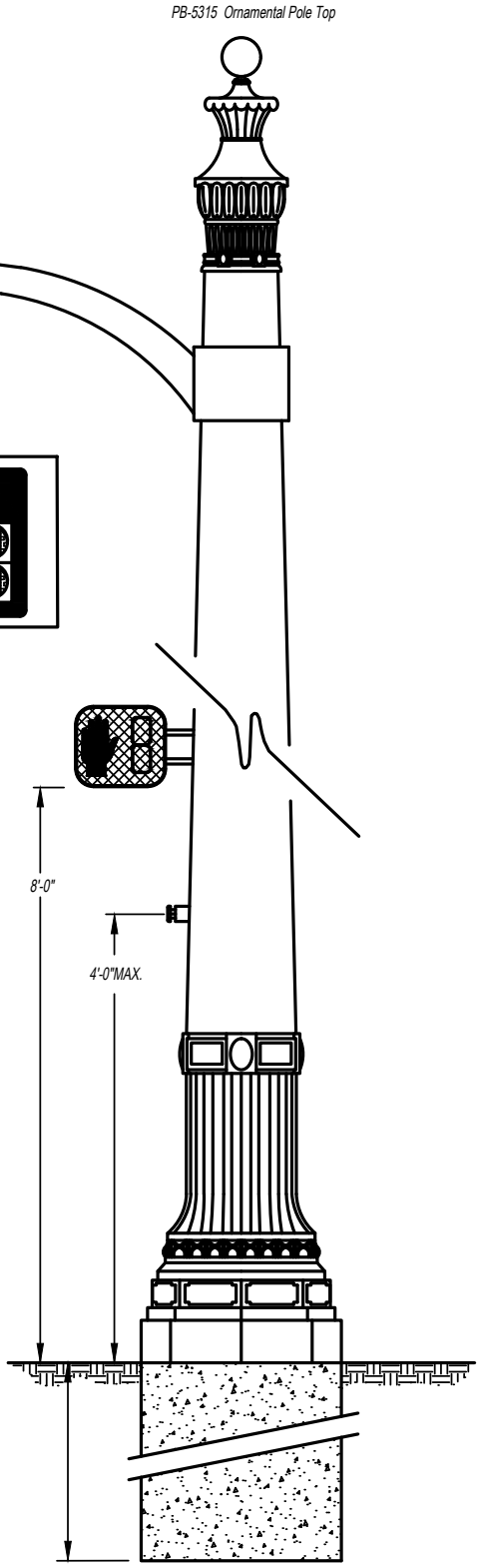

AP-0802 Ornamental Pole Base Fits 8"-12" Dia. Poles -or- PB-5381 Ornamental Base Fits 18"-26" Dia. Poles .

The location of strain poles and mast arm poles shall be in compliance with the AASHTO Roadside Design Guide and ALDOT standards, and approved by the City Engineer.

Concrete for foundations shall comply with the requirements for Class A, Type 2a concrete. Reinforcing steel shall meet the requirements for steel reinforcement and shall be Grade 60 (400) billet steel. Minimum design wind speed shall be based on ALDOT standards. All materials and equipment furnished shall be new, except when the plans specifically provide for there-use of existing equipment.

VIDEO DETECTION CAMERA MOUNTING DETAIL

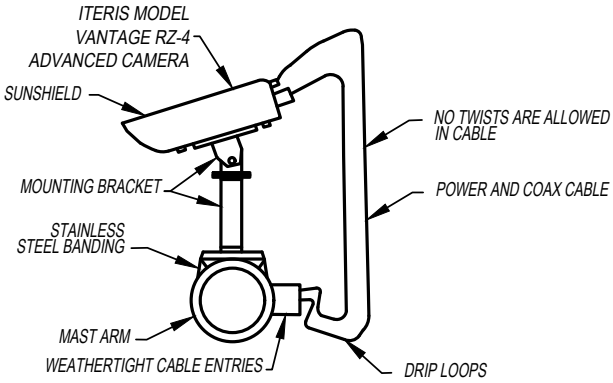

* CABLES SHALL BE ROUTED THROUGH BLACK POLE BRACKET OFF THE BACK OF THE MAST ARM.

STANDARD DETAILS: TRAFFIC	2.00
DEPARTMENT: ENGINEERING	REVISIONS:
SCALE: N.T.S.	
DRAWN BY: GINA McCRICKARD	
CITY ENGINEER: Alison Frazier	
APPVD. BY: Alison Frazier	
IMPLEMENTED: 01-01-2022	

City of Auburn

PEDESTRIAN POLE INSTALLATION DETAIL

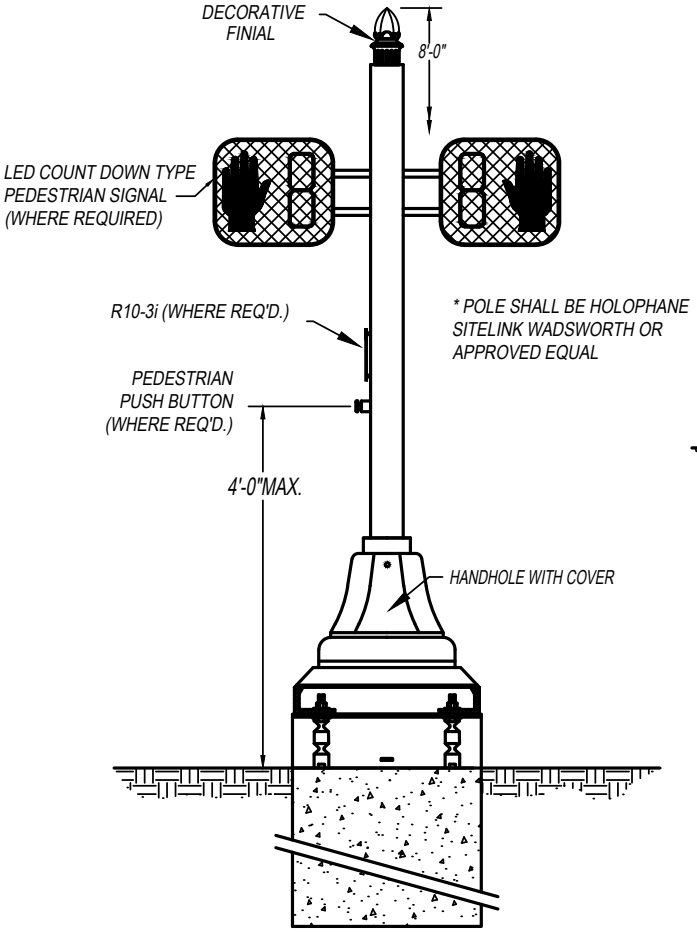

PEDESTRIAN PUSH BUTTON DETAIL

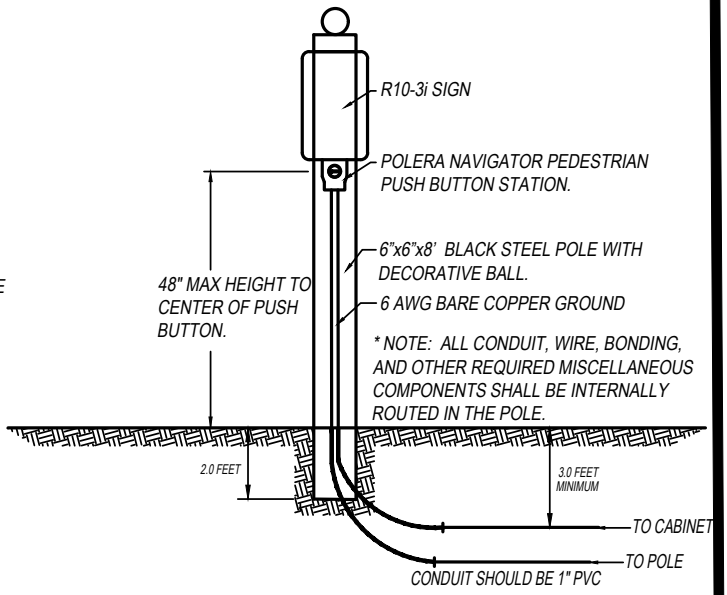

STANDARD DETAILS: TRAFFIC	2.01
City of Auburn	
DEPARTMENT: ENGINEERING	REVISIONS:
SCALE: N.T.S.	
DRAWN BY: GINA McCRICKARD	
CITY ENGINEER: Alison Frazier	
APPVD. BY: Alison Frazier	
IMPLEMENTED: 01-01-2022	

UNDERGROUND POWER SOURCE FOR COMBINATION TRAFFIC SIGNAL AND STREET LIGHTING POLES

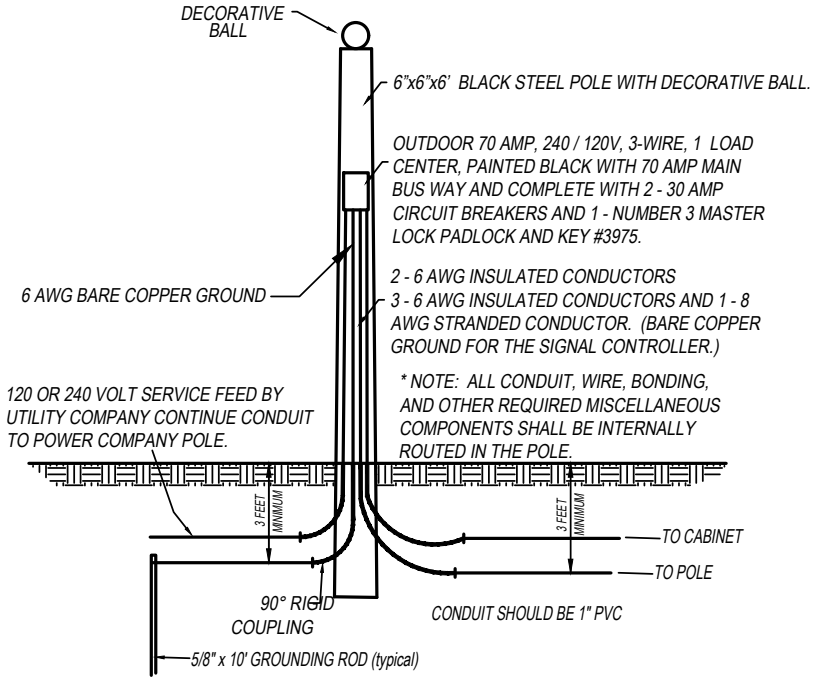

LOOP SPLICING DETAIL

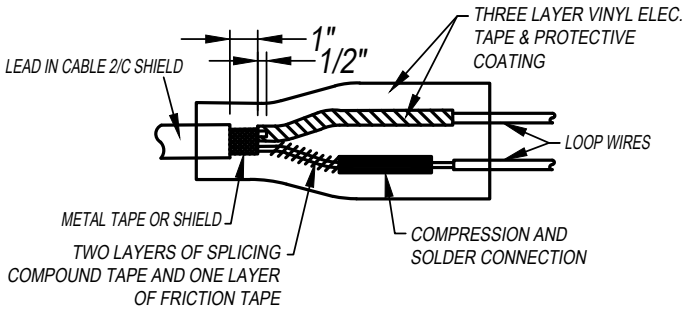

STANDARD DETAILS: TRAFFIC	2.02
DEPARTMENT: ENGINEERING	REVISIONS:
SCALE: N.T.S.	
DRAWN BY: GINA McCRICKARD	
CITY ENGINEER: Alison Frazier	
APPVD. BY: Alison Frazier	
IMPLEMENTED: 01-01-2022	

City of Auburn

TYPICAL TRAFFIC SIGNAL SIGNS AND HEADS

DETAIL OF TYPICAL TRAFFIC SIGNAL SIGNS

R10-10(L)
24" x 30"

R10-10(R)
24" x 30"

R10-11a
24'x 30"

R10-12
24" x 30"

R10-12a
30" x 36"

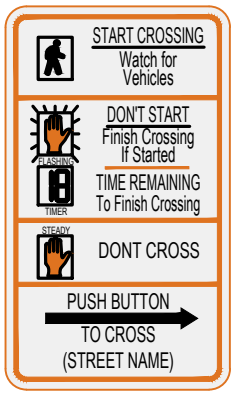

Street name shall be included in braille on the face of the sign. **

R10-3i **
9" x 15"

DETAIL OF TYPICAL TRAFFIC SIGNAL HEADS

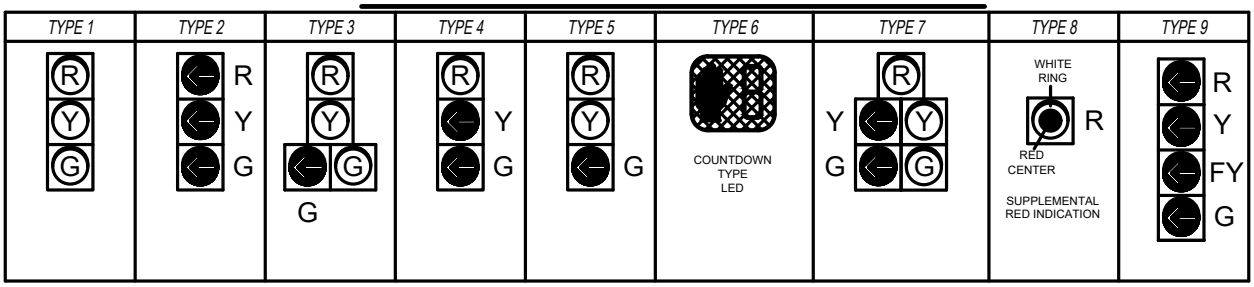

STANDARD DETAILS: TRAFFIC	2.03
City of Auburn	
DEPARTMENT: ENGINEERING	REVISIONS:
SCALE: N.T.S.	
DRAWN BY: GINA McCRICKARD	
CITY ENGINEER: Alison Frazier	
APPVD. BY: Alison Frazier	
IMPLEMENTED: 01-01-2022	

LARGE LOOP DETECTOR INSTALLATION DETAIL

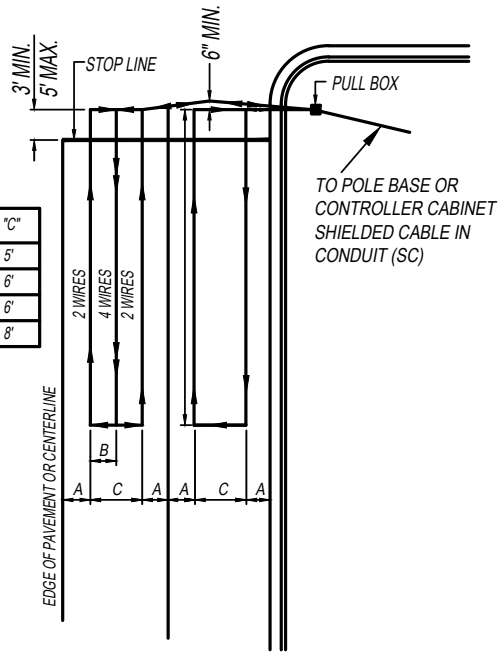

LANE WIDTH	"A"	"B"	"C"
10'	2.5'	2.5'	5'
11'	2.5'	3'	6'
12'	3'	3'	6'
14'	3'	4'	8'

MINIMUM LOOP SEPARATION WHEN NO LANE LINES ARE PRESENT IS 3'

ALL LOOPS ARE 40' IN LENGTH UNLESS OTHERWISE SPECIFIED.

TYPICAL DETAIL OF LOOP DECTECTOR WHERE TRANSVERSE CONCRETE JOINTS, MANHOLES ETC. ARE ENCOUNTERED

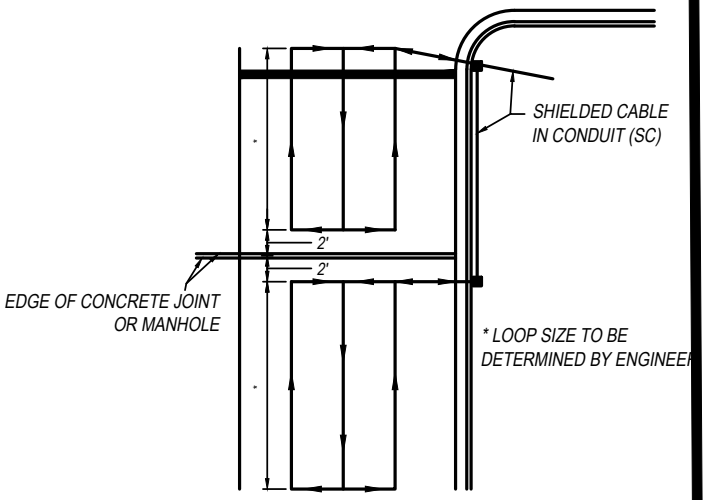

NOTE:
NO LOOPS ARE TO BE INSTALLED THROUGH, OVER, OR UNDER TRANSVERSE CONCRETE JOINTS IN CONCRETE PAVEMENT, AND NO MANHOLES, INLETS, ETC. MAY BE LOCATED WITHIN A LOOP. IF ANY OF THE ABOVE ARE ENCOUNTERED THE LOCATION OF THE LOOP MAY BE VARIED SLIGHTLY AS DIRECTED BY THE ENGINEER. IF THE ABOVE ITEMS ARE UNAVOIDABLE, SMALLER LOOPS AS SHOWN TO THE RIGHT MAY BE USED. SMALLER LOOPS USED TO REPLACE ONE LARGE LOOP MAY BE CONNECTED TO ONE CHANNEL.

SMALL LOOP DETECTOR INSTALLATION DETAIL

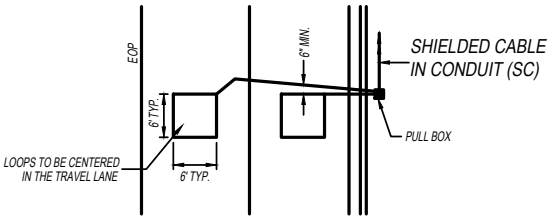

STANDARD DETAILS: TRAFFIC	2.04
DEPARTMENT: ENGINEERING	REVISIONS:
SCALE: N.T.S.	
DRAWN BY: GINA McCRICKARD	
CITY ENGINEER: Alison Frazier	
APPVD. BY: Alison Frazier	
IMPLEMENTED: 01-01-2022	

City of Auburn

TYPICAL PEDESTRIAN LIGHT POLE DETAIL

NOTE:

1. DETAIL IS TYPICAL FOR FIXTURE TYPE 'PL".
2. CONTRACTOR SHALL COORDINATE ANCHOR BOLT ORIENTATION SO THAT ALL HANDHOLES ARE SAME AND "SITELINK" POLE SLOT IS EXACTLY ADJACENT AND PARALLEL TO STREET. 180° SHALL BE AT STREET SIDE AND HANDHOLE SHALL BE AT 0° OPPOSITE STREET. NO EXCEPTIONS TO THIS CORRECT POLE INSTALLATION.
3. THE SKIRT ASSEMBLY SHALL CONSISTS OF 17" DIAMETER x 1/2" THICK STEEL PLATE WITH A 7" TALL ALUMINUM 'SKIRT' ATTACHED WITH STAINLESS STEEL SCREWS. THE SKIRT PLATE SHALL HAVE HOLES CORRESPONDING TO THE ANCHOR PLATE WIREWAY AND ANCHOR BOLTS. THE 7" TALL SKIRT ASSEMBLY SHALL REST UPON THE LEVEL BREAKAWAY ANCHOR BOLTS (TRANSPO 4100, 1-8 THREAD) 'FLOATING ABOVE GRADE AND PROVIDING A PLATFORM FOR THE 17" DIAMETER CLAMSHELL BASE. THE SHAFT ANCHOR PLATE SHALL REST UPON THE SKIRT PLATE, FASTENED WITH THE APPROPRIATE HARDWARE. THE CLAMSHELL BASE SHALL BE FITTED AROUND THE SHAFT AND REST UPON THE SKIRT ASSEMBLY.

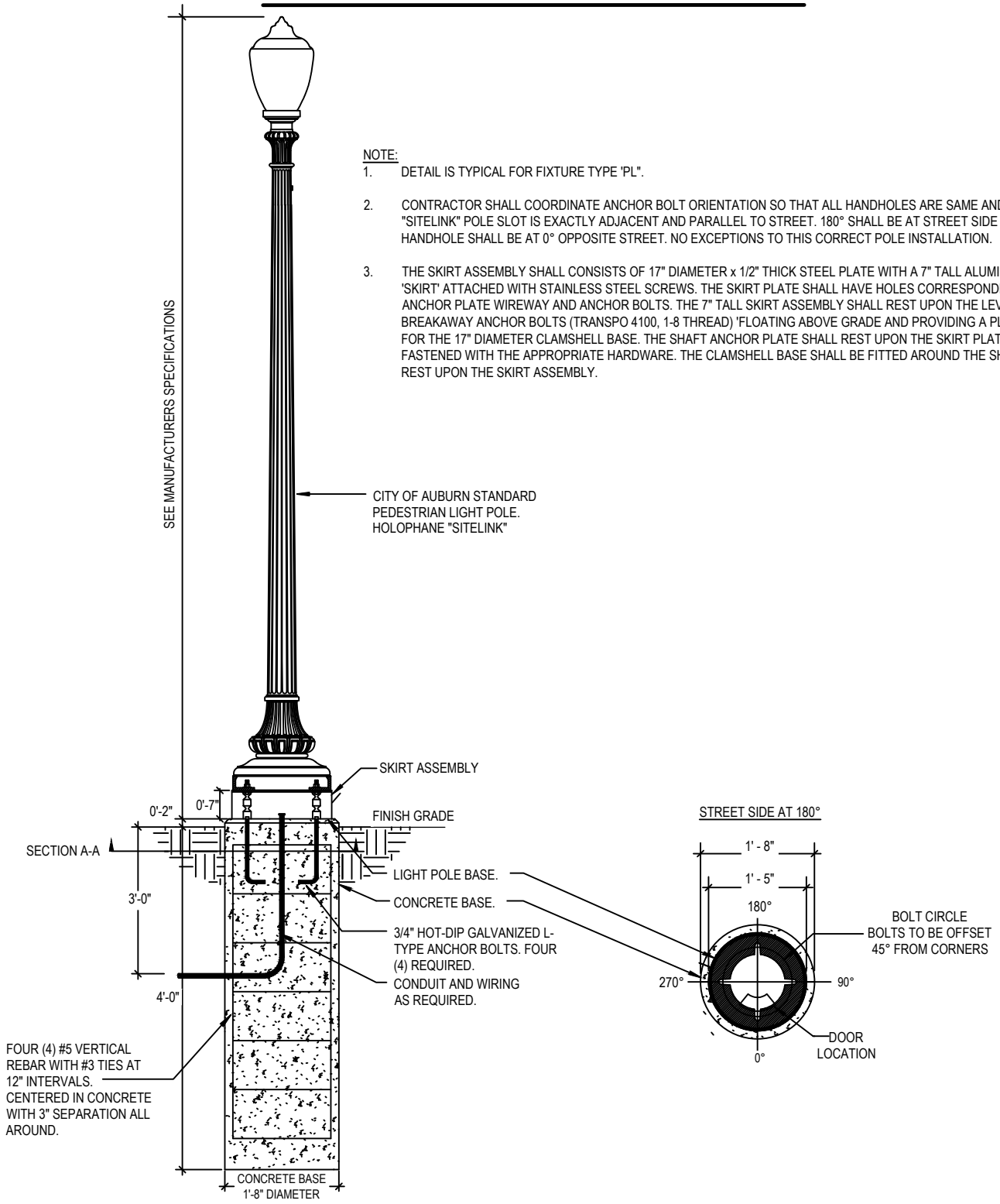

STANDARD DETAILS: TRAFFIC	2.05
DEPARTMENT: ENGINEERING	REVISIONS:
SCALE: N.T.S.	
DRAWN BY: GINA McCRICKARD	
CITY ENGINEER: Alison Frazier	
APPVD. BY: Alison Frazier	
IMPLEMENTED: 01-01-2022	

City of Auburn

TYPICAL STREET LIGHT POLE DETAIL

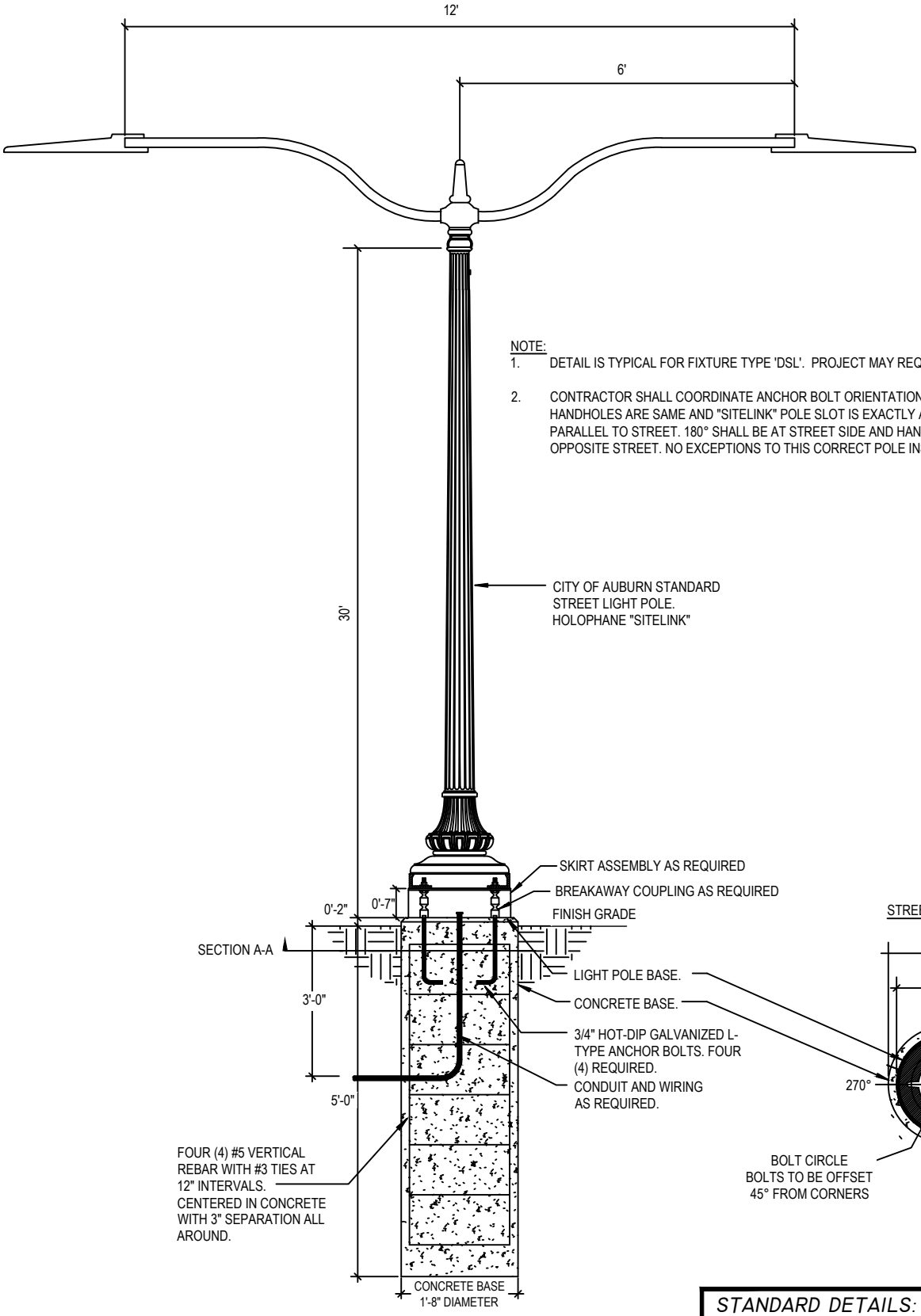

NOTE:

1. DETAIL IS TYPICAL FOR FIXTURE TYPE 'DSL'. PROJECT MAY REQUIRE A SINGLE ARM.
2. CONTRACTOR SHALL COORDINATE ANCHOR BOLT ORIENTATION SO THAT ALL HANDHOLES ARE SAME AND "SITELINK" POLE SLOT IS EXACTLY ADJACENT AND PARALLEL TO STREET. 180° SHALL BE AT STREET SIDE AND HANDHOLE SHALL BE AT 0° OPPOSITE STREET. NO EXCEPTIONS TO THIS CORRECT POLE INSTALLATION.

STANDARD DETAILS: TRAFFIC	2.06
DEPARTMENT: ENGINEERING	REVISIONS:
SCALE: N.T.S.	
DRAWN BY: GINA McCRICKARD	
CITY ENGINEER: Alison Frazier	
APPVD. BY: Alison Frazier	
IMPLEMENTED: 01-01-2022	

City of Auburn

TYPICAL LIGHT POLE SPECIFICATION

DEVELOPER REQUIREMENTS

1. THE DEVELOPER WILL BE RESPONSIBLE FOR THE INDIVIDUAL DESIGNS OF EACH ENCLOSURE AREA OR INCORPORATING LIGHTING INTO THE EXISTING ENCLOSURE AREA DESIGNS.

2. REFER TO SECTION 5.6 "STREET LIGHTING IN THE CITY OF AUBURN ENGINEERING DESIGN AND CONSTRUCTION MANUAL FOR FULL REQUIREMENTS.

3. PROVISIONS FOR FUTURE FIXTURES LOCATIONS ASSIGNED TO THE ENCLOSURE MUST BE ACCOMMODATED IN THE ELECTRICAL DESIGN. THIS MAY INCLUDE BUT NOT LIMITED TO, INCREASED CONDUIT SIZE, SPARE CONDUIT, INCREASE WIRE SIZE, SPARE WIRE, JUNCTION BOXES, WIRE LABELS AT ALL JUNCTIONS, STUB OUTS, AND OTHER MISCELLANEOUS ACCOMMODATIONS.

4. DEVELOPER MUST CONFIRM IF ANY OF MASTER PLAN WORK HAS BEEN DONE AT HIS SPECIFIC LOCATION. VERIFY IF PANEL ENCLOSURE HAS BEEN INSTALLED AND ANY POLE LIGHTS THAT MAY BE IN PLACE. COORDINATE ALL NEW ELECTRICAL WORK WITH OWNER REPRESENTATIVE.

PEDESTRIAN LIGHTING FIXTURE SCHEDULE

SYMBOL	MANUFACTURER & CATALOG NUMBER	LAMP	WATTS	MOUNTING	VOLTS	REMARKS
PL	HOLOPHANE GVD3-P30-40K-MVOLT-SPL-GL3-BK (LIGHT FIXTURE) WDA-12-SL4-17D-C03-BWKT-BK-ABG (POLE)	LED 4000K	60	POLE	120	DECORATIVE LED LUMINAIRE WITH: CAST ALUMINUM HOUSING (BLACK FINISH); BOROSILICATE GLASS REFRACTOR; TYPE 3 DISTRIBUTION; INTEGRAL 400 MILLI-AMP LED DRIVER. MOUNT FIXTURE ON 12' STRAIGHT ALUMINUM, SITELINK POLE.
PB	HOLOPHANE GVD3-P30-40K-MVOLT-SPL-GL3-BK (LIGHT FIXTURE) WDA-12-FTJ-19S-C03-BK-ABG (POLE) FPH-3BO FLAG POLE HOLDER	LED 4000K	60	POLE	120	DECORATIVE LED LUMINAIRE WITH: CAST ALUMINUM HOUSING (BRONZE FINISH); BOROSILICATE GLASS REFRACTOR; TYPE 3 DISTRIBUTION; INTEGRAL 400 MILLI-AMP LED DRIVER. MOUNT FIXTURE ON 12' CLASSIC TAPERED AND FLUTED ALUMINUM POLE WITH BRONZE FINISH, WITH RECEPTACLE INSIDE HANDHOLE AND ONE NEAR TOP OF POLE. FLAG POLE HOLDER AT 96" A.F.G.
PLR	HOLOPHANE GVD3-P30-40K-MVOLT-SPL-GL3-BK (LIGHT FIXTURE) WDA-12-SL4-17D-C03-BWKT-BK-FGB-R132 (POLE)	LED 4000K	60	POLE	120	DECORATIVE LED LUMINAIRE WITH: CAST ALUMINUM HOUSING (BLACK FINISH); BOROSILICATE GLASS REFRACTOR; TYPE 3 DISTRIBUTION; INTEGRAL 400 MILLI-AMP LED DRIVER. MOUNT FIXTURE ON 12' STRAIGHT ALUMINUM, SITELINK POLE WITH RECEPTACLE INSIDE HANDHOLE AND ONE AT 11'-0" ABOVE BOTTOM OF POLE.

STREET LIGHTING FIXTURE SCHEDULE

SYMBOL	MANUFACTURER & CATALOG NUMBER	LAMP	WATTS	MOUNTING	VOLTS	REMARKS
DSL	HOLOPHANE ATB0 P304 MVOLT R3 BK P7 (LIGHT FIXTURE - (2)) WDA 30 SL6 17D C05 BK RP132A, BHC 72IN 2A TN SL6 BK, FGIUS, BWKT 1700R 1200BC 100AB, TRANSPO, AB RFD325929 (POLE (1) & ROADWAY ARM (2)).	LED 4000K	124	POLE	120	"AUTOBAHN" LED LUMINAIRE (2@180°) WITH CAST ALUMINUM HOUSING, BLACK FINISH, TYPE III DISTRIBUTION, INTEGRAL LED DRIVER, 30' DECORATIVE POLE & BASE. RECEPTACLE INSIDE HANDHOLE AND TOP OF POLE. 6' ROADWAY ARM (2).

POLE BASE DETAIL

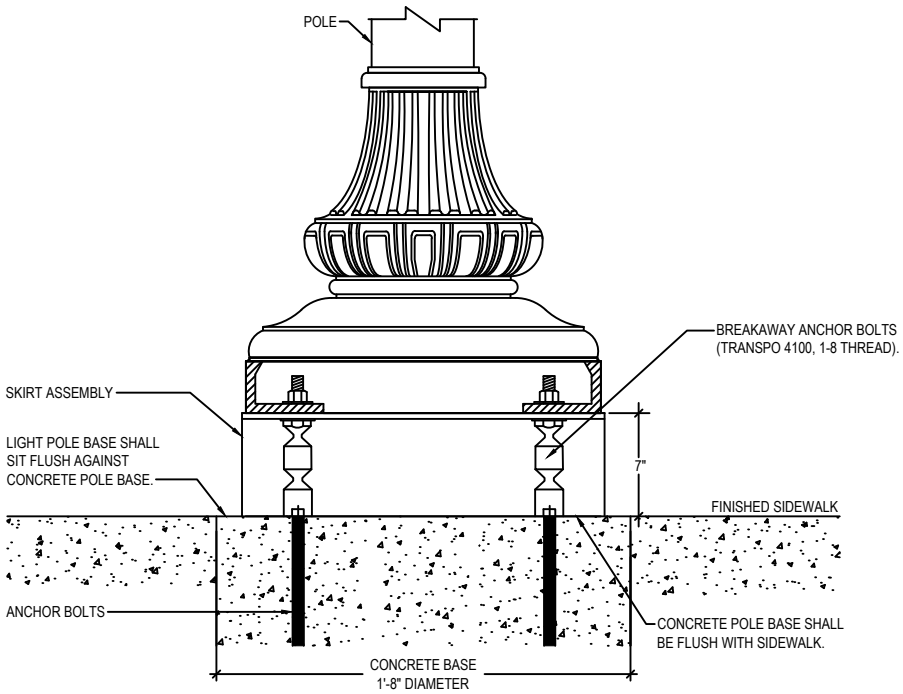

POLEBASE INSTALLED ON SIDEWALK

ENLARGED TYPICAL POLEBASE DETAIL

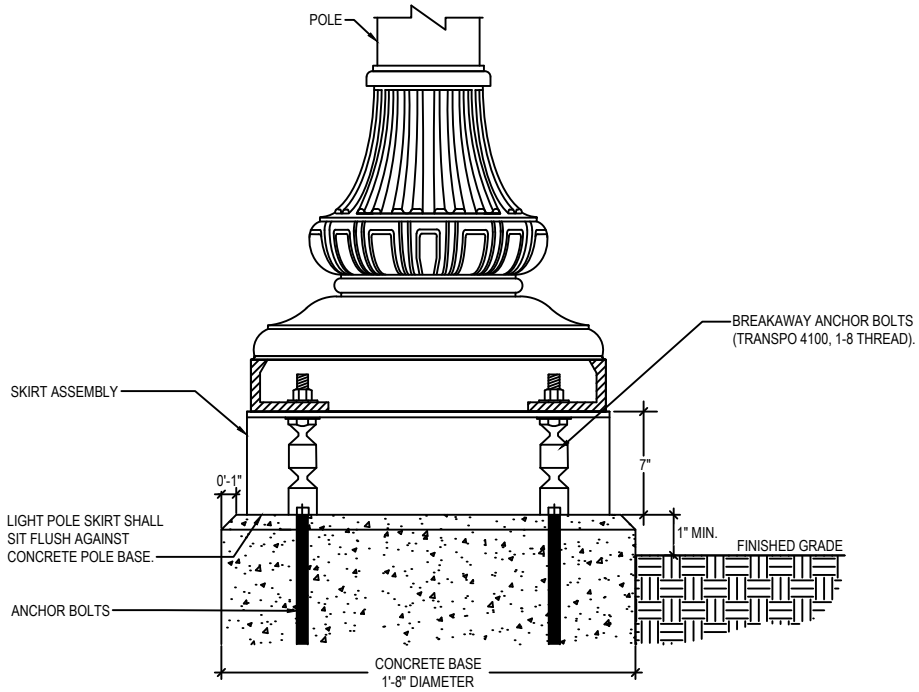

POLEBASE INSTALLED ON GRADE

ENLARGED TYPICAL POLEBASE DETAIL

STANDARD DETAILS: TRAFFIC	2.08
DEPARTMENT: ENGINEERING	REVISIONS:
SCALE: N.T.S.	
DRAWN BY: GINA McCRICKARD	
CITY ENGINEER: Alison Frazier	
APPVD. BY: Alison Frazier	
IMPLEMENTED: 01-01-2022	

City of Auburn

POLE BASE DETAIL

GROUND ROD DETAIL

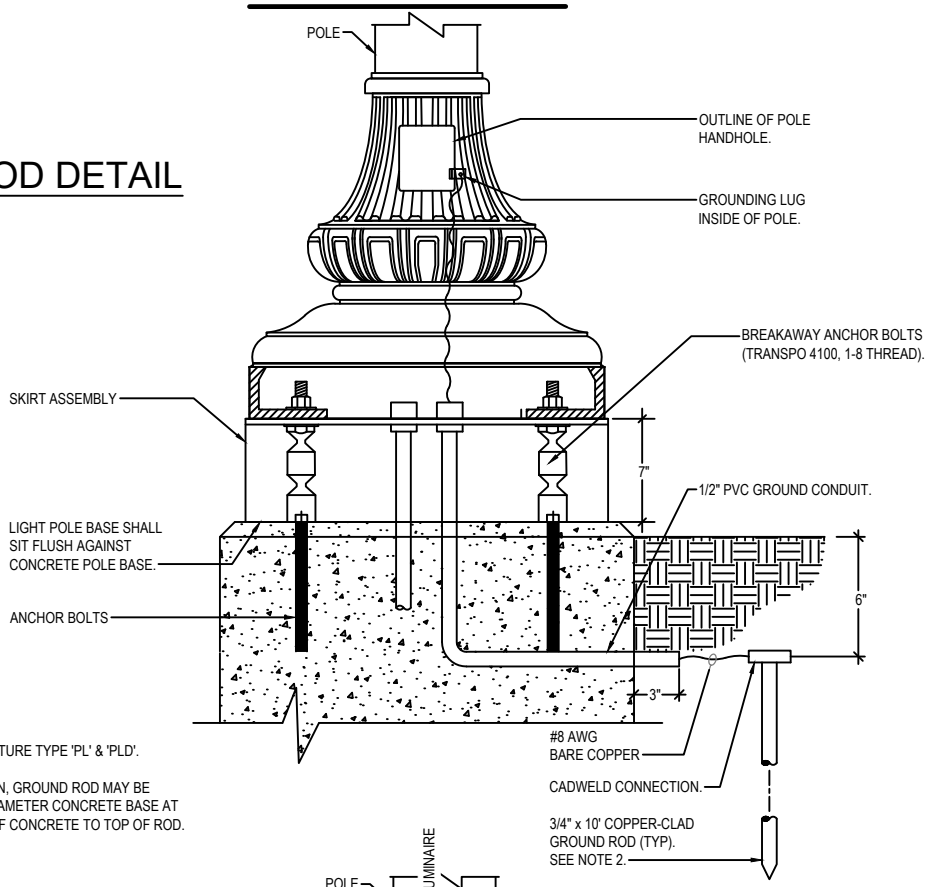

NOTE:
1. DETAIL TYPICAL FOR FIXTURE TYPE 'PL' & 'PLD'.
2. AT CONTRACTOR OPTION, GROUND ROD MAY BE INSTALLED INSIDE 20" DIAMETER CONCRETE BASE AT LEAST 18" BELOW TOP OF CONCRETE TO TOP OF ROD.

POLE HANDHOLE DETAIL

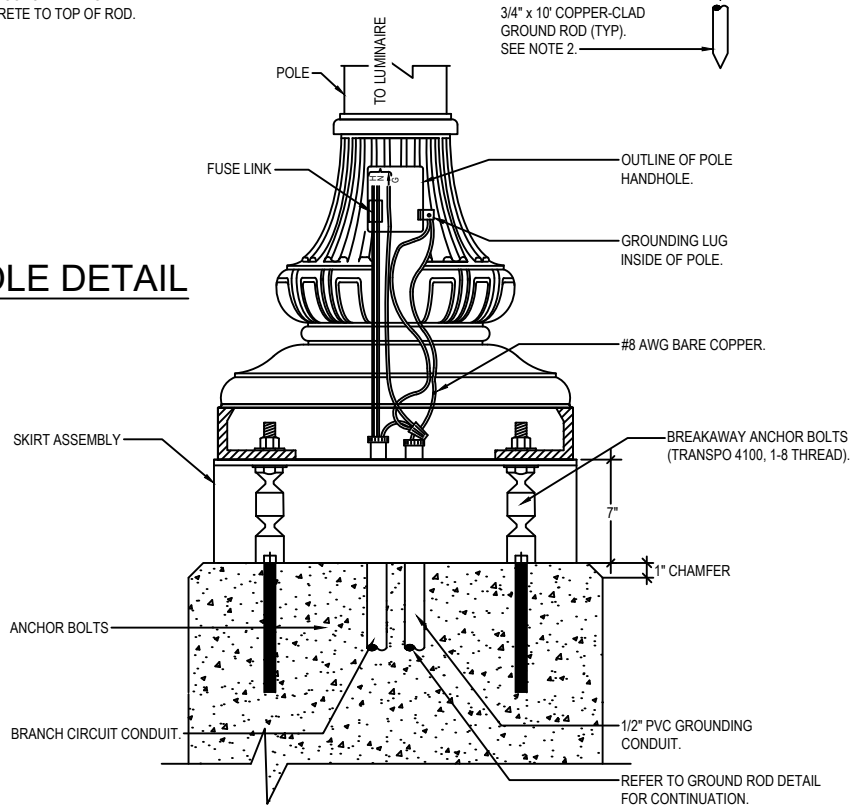

NOTE:
1. DETAIL TYPICAL FOR FIXTURE TYPE AS REQUIRED.

STANDARD DETAILS: TRAFFIC	2.09
DEPARTMENT: ENGINEERING	REVISIONS:
SCALE: N.T.S.	
DRAWN BY: GINA McCRICKARD	
CITY ENGINEER: Alison Frazier	
APPVD. BY: Alison Frazier	
IMPLEMENTED: 01-01-2022	

City of Auburn

ELECTRICAL NOTES

ENCLOSURE NOTES

1. ENCLOSURE SHALL BE FREESTANDING ON CONCRETE PAD, RAINPROOF-NEMA 3R, STEEL (G90), PAINTED BLACK (RAL 9017), HINGED AND LOCKABLE OUTSIDE DOOR, HINGED DEAD-FRONT INSIDE COVER. ALL INTERNAL WIRING AND CONNECTIONS SHALL BE BY MANUFACTURER. MUST BE UL "SERVICE ENTRANCE" RATED. SIZE AS REQUIRED. ALL CIRCUIT BREAKERS (MAIN & BRANCH) AND H-O-A SWITCH SHALL BE ACCESSIBLE INSIDE ENCLOSURE WITH DEAD-FRONT COVER CLOSED. MILBANK OR APPROVED EQUIVALENT.

2. CONTACTOR SHALL BE 100 AMP 2 POLE. ELECTRICALLY HELD WITH 120 VOLT COIL, OPEN TYPE. THIS CONTACTOR SHALL CONTROL "ON-OFF" OF ALL CIRCUITS IN PANEL 'SL'.

3. HAND-OFF-AUTO (H-O-A) SWITCH SHALL BE 120 VOLT 20 AMP RATED AND SHALL OPERATE AS FOLLOWS:

   "HAND"- CONTACTOR IS CLOSED AND PANEL 'SL' IS ENERGIZED.

   "OFF"-CONTACTOR IS OPEN AND PANEL 'SL' IS DEENERGIZED.

   "AUTO"-PHOTOCELL CONTROLS CONTACTOR AND "ON-OFF" OF PANEL 'SL'.

4. PHOTOCELL SHALL BE SPST 120 VOLT TO CONTROL CONTACTOR AND "ON-OFF" OF PANEL 'SL'. PHOTOCELL SHALL BE MOUNTED INSIDE OF ENCLOSURE WITH GLASS WINDOW TO DETECT OUTSIDE LIGHT.

5. CIRCUIT BREAKER (SIZE AS NOTED), SEPARATE OPEN TYPE, 10K AIC. ACCESSIBLE ON INSIDE HINGED COVER WITH LABEL DESCRIBING FUNCTION.

6. UTILITY COMPANY ELECTRIC METER. MOUNT SOCKET INSIDE ENCLOSURE WITH METER VISIBLE ON OUTSIDE. COORDINATE REQUIREMENTS WITH UTILITY COMPANY. METER MOUNTING HEIGHT SHALL BE BETWEEN 48" AND 60" ABOVE FINISH GRADE TO CENTER OF METER.

7. PANEL, 120/240VOLT 1 PHASE 3 WIRE, CIRCUIT BREAKER LOAD CENTER TYPE. REFER TO PANELBOARD SCHEDULE FOR CIRCUIT BREAKERS. BREAKERS SHALL BE ACCESSIBLE ON INSIDE HINGED COVER. PROVIDE DIRECTORY OR LABELS.

8. CONTRACTOR SHALL FURNISH AND INSTALL ONE (1) 3"c. 36" DEEP. ALABAMA POWER COMPANY WILL FURNISH AND INSTALL CONDUCTORS. COORDINATE CONNECTION REQUIREMENTS.

9. ALL ENCLOSURE COMPONENTS AND INTERNAL WIRING BETWEEN COMPONENTS SHALL BE DONE BY ENCLOSURE MANUFACTURER.

10. THIS IS A STANDARD ELECTRICAL ENCLOSURE FOR CITY OF AUBURN AND MAY INCLUDE EQUIPMENT NOT USED ON THIS PROJECT.

11. SERVICE TERMINATION LUGS.

GENERAL NOTES

12. ALL ELECTRICAL WORK AND MATERIAL SHALL CONFORM TO THE LATEST EDITION OF THE N.E.C. AND THE REQUIREMENTS OF THE STATE AND LOCAL AUTHORITY HAVING JURISDICTION.

13. WIRING SYSTEM SHALL CONSIST OF COPPER WIRING INSTALLED IN CONDUIT, MINIMUM WIRE SIZE SHALL BE #12 AWG. MINIMUM CONDUIT SIZE SHALL BE 3/4".

14. ALL CONDUCTORS SHALL BE TYPE THHN.

15. CONDUIT SHALL BE SIZED IN ACCORDANCE WITH TABLE 1, CHAPTER 9 OF N.EC.

16. CONTRACTOR SHALL PROVIDE ALL MATERIAL NECESSARY TO FINALIZE A NEAT, COMPLETE AND PROPERLY WORKING ELECTRICAL SYSTEM WHICH CONFORMS TO ALL LOCAL CODES AND THE NATIONAL ELECTRICAL CODE AS PER PLANS, AND SPECS.

17. IT SHALL BE THE RESPONSIBILITY OF THE CONTRACTOR TO VISIT THE SITE AND BECOME THOROUGHLY FAMILIAR WITH ALL EXISTING CONDITIONS PRIOR TO BID DATE OR CONSTRUCTION DATE, AS HE SHALL BE RESPONSIBLE FOR SAME.

18. EXACT LOCATION OF EXISTING UNDERGROUND UTILITIES IS THE RESPONSIBILITY OF THE CONTRACTOR.

19. CUTTING OF EXISTING PAVEMENT IS NOT ALLOWED FOR ROUTING OF NEW CIRCUITS/CONDUITS. PROVIDE DIRECTIONAL HORIZONTAL BORING MINIMUM 36" BELOW GRADE AS REQUIRED.

20. FLAG HOLDER SHALL BE INSTALLED 8'-0" ABOVE GRADE IF REQUIRED.

21. REQUIRED CHAMFER SHALL BE CONSTRUCTED USING CHAMFER STRIP. IT MAY NOT BE HAND TOOLED.

22. CONTRACTOR SHALL COORDINATE EXACT LOCATION OF PEDESTRIAN LIGHTS WITH OWNER REPRESENTATIVE PRIOR TO INSTALLATION.

23. CONTRACTOR SHALL SCHEDULE ALL INSPECTIONS WITH OWNER REPRESENTATIVES AS REQUIRED IN THE CITY OF AUBURN ENGINEERING DESIGN AND CONSTRUCTION MANUAL.

24. SERVICE VOLTAGE AT EACH ELECTRICAL ENCLOSURE SHALL BE 120 / 240 VOLT, 1 PHASE, 3 WIRE. SERVICE SHALL BE UNDERGROUND BY ALABAMA POWER.

25. ENCLOSURE LOCATIONS ARE GENERAL. COORDINATE EXACT LOCATIONS WITH OWNER REPRESENTATIVE AND ALABAMA POWER COMPANY PRIOR TO INSTALLATION.

26. EACH ENCLOSURE SHALL HAVE (1) SPARE 2-INCH CONDUIT STUBBED OUT 5' AND CAPPED. COORDINATE EXACT LOCATION WITH THE CITY OF AUBURN.

WEATHERPROOF RECEPTACLE - EXTERNAL POST SHAFT LOCATION

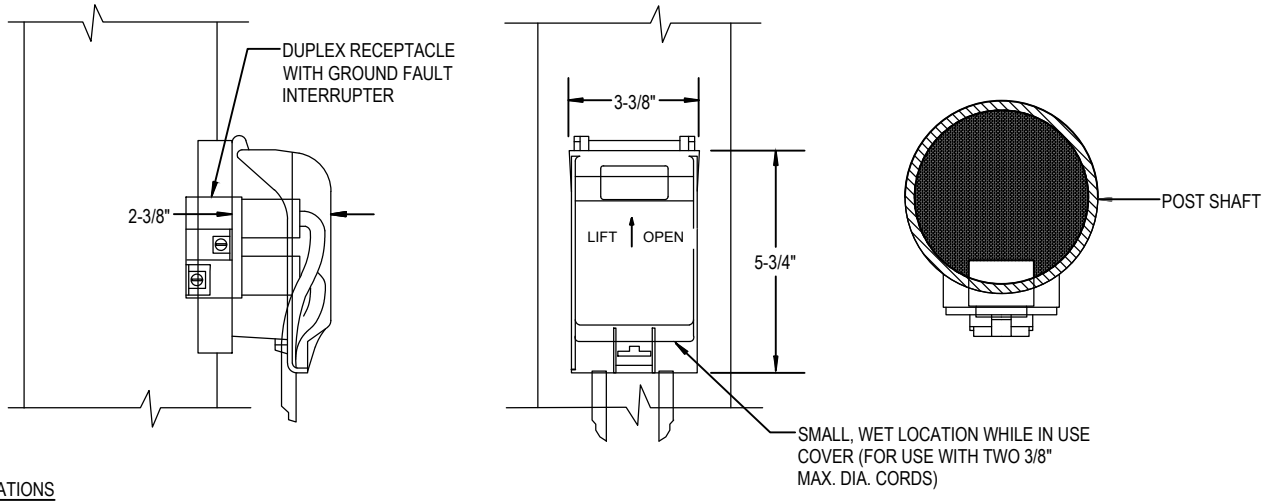

SPECIFICATIONS

A 20 AMP, 125 VOLT, GROUND FAULT CIRCUIT INTERRUPTER DUPLEX RECEPTACLE SHALL BE MOUNTED IN THE POST. THE RECEPTACLE SHALL BE UL LISTED ACCORDING TO E-48380 AND UL 943 CLASS A AND UL 498. THE RECEPTACLE SHALL HAVE A CAST ALUMINUM, LOCKABLE, UL LISTED COVER THAT IS SUITABLE FOR WET LOCATIONS WHILE IN USE AND COMPLIES WITH NEC ARTICLE 410-57(B). THE COVER SHALL ACCEPT MOST COMMON CORD SETS UP TO 3/8" DIAMETER (14/3). THE RECEPTACLE AND COVER SHALL MOUNT TO AN OUTLET OPENING, IN THE POST SHAFT, WITH A GASKET AND STAINLESS STEEL SCREWS. HOLOPHANE FGIUS-SBKH. LOCATE THIS RECEPTACLE 11' ABOVE BOTTOM OF POLE. THIS RECEPTACLE SHALL BE MOUNTED 11'-0" ABOVE BOTTOM OF POLE BASE.

WEATHERPROOF RECEPTACLE - INTERNAL BASE LOCATION

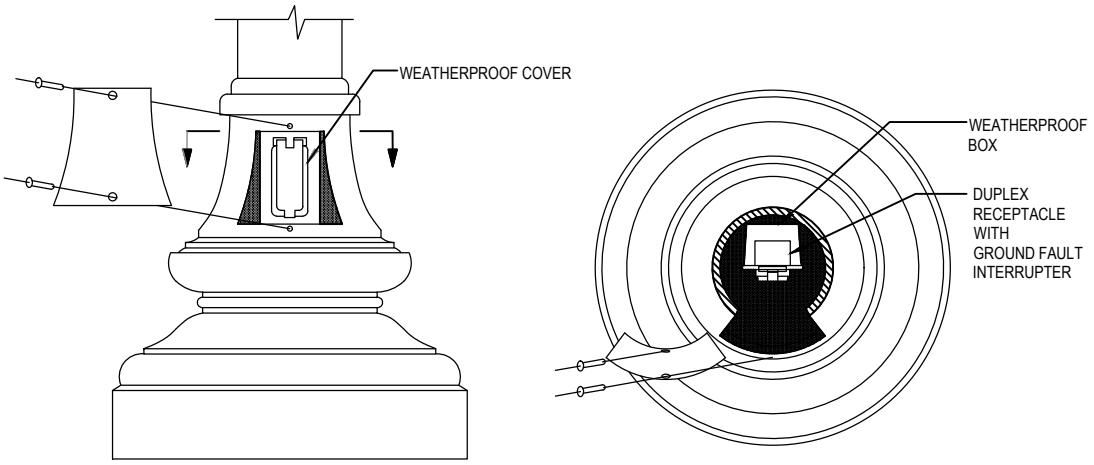

SPECIFICATIONS

A 20 AMP, 125 VOLT, GROUND FAULT CIRCUIT INTERRUPTER DUPLEX RECEPTACLE SHALL BE MOUNTED INSIDE THE POST BASE, FACING TOWARD THE ACCESS DOOR. THE RECEPTACLE SHALL BE UL LISTED ACCORDING TO E-48380 AND UL 943 CLASS A AND UL 498. THE RECEPTACLE SHALL BE MOUNTED IN A CAST ALUMINUM BOX AND COVER THAT IS SUITABLE FOR WET LOCATIONS WHILE NOT IN USE. THE RECEPTACLE AND COVER SHALL MOUNT TO A OUTLET BOX WITH A GASKET AND STAINLESS STEEL SCREWS. HOLOPHANE RB/GFI/WPC

NOTES:

1. RECEPTACLES MUST BE WIRED ON SEPARATE CIRCUIT FROM LIGHT.
2. RECEPTACLES ARE TYPICALLY INSTALLED FOR USE BY AUTHORIZED PERSONNEL FOR SPECIAL EVENTS, DECORATIVE SEASONAL LIGHTING, AND OWNER MAINTENANCE PURPOSES.

STANDARD DETAILS: TRAFFIC	2.11
City of Auburn	
DEPARTMENT: ENGINEERING	REVISIONS:
SCALE: N.T.S.	
DRAWN BY: GINA McCRICKARD	
CITY ENGINEER: Alison Frazier	
APPVD. BY: Alison Frazier	
IMPLEMENTED: 01-01-2022	

PANEL ENCLOSURE DETAIL - TYPICAL

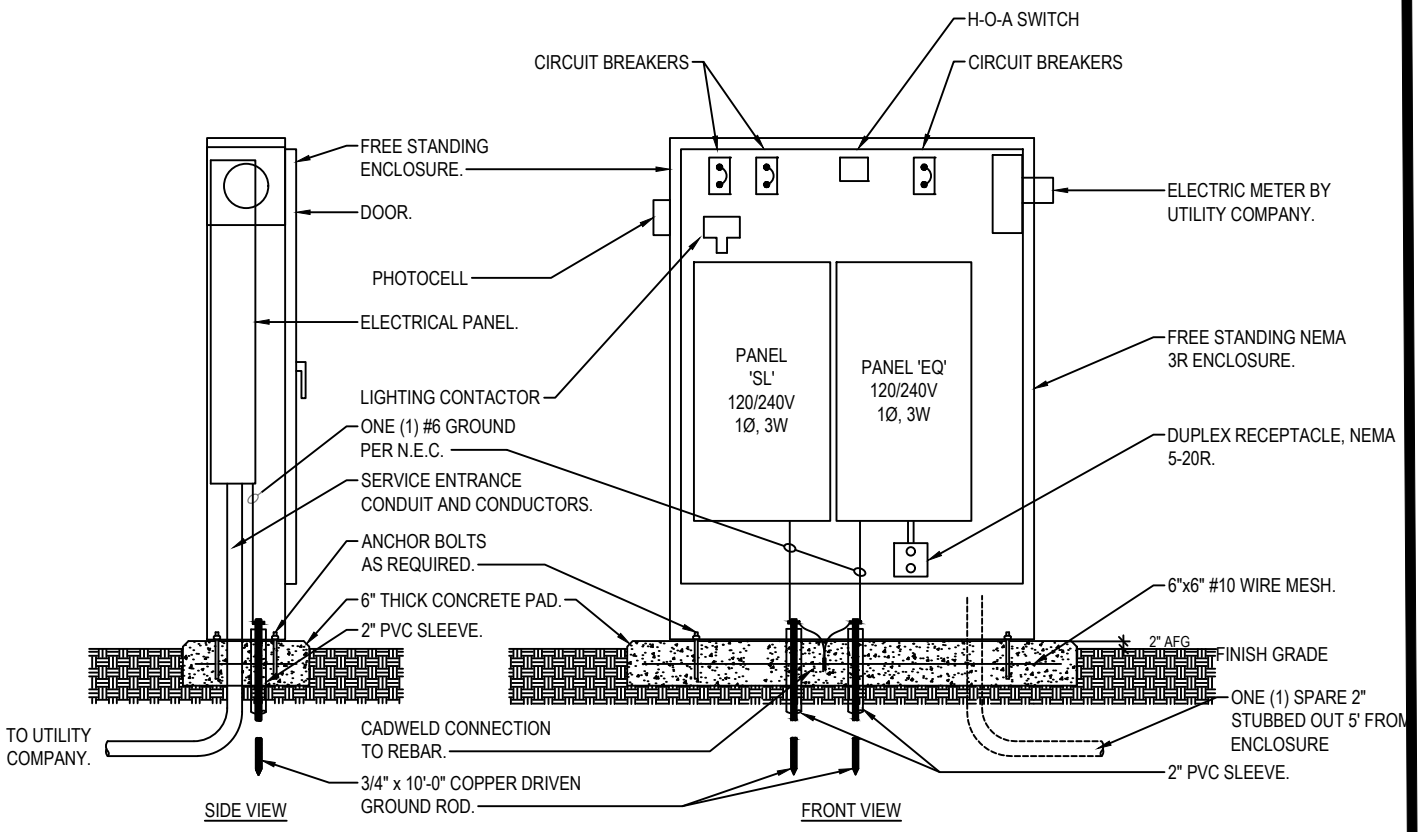

STANDARD DETAILS: TRAFFIC	2.12
DEPARTMENT: ENGINEERING	REVISIONS:
SCALE: N.T.S.	
DRAWN BY: GINA McCRICKARD	
CITY ENGINEER: Alison Frazier	
APPVD. BY: Alison Frazier	
IMPLEMENTED: 01-01-2022	

City of Auburn

EQUIPMENT INSIDE ENCLOSURE - TYPICAL

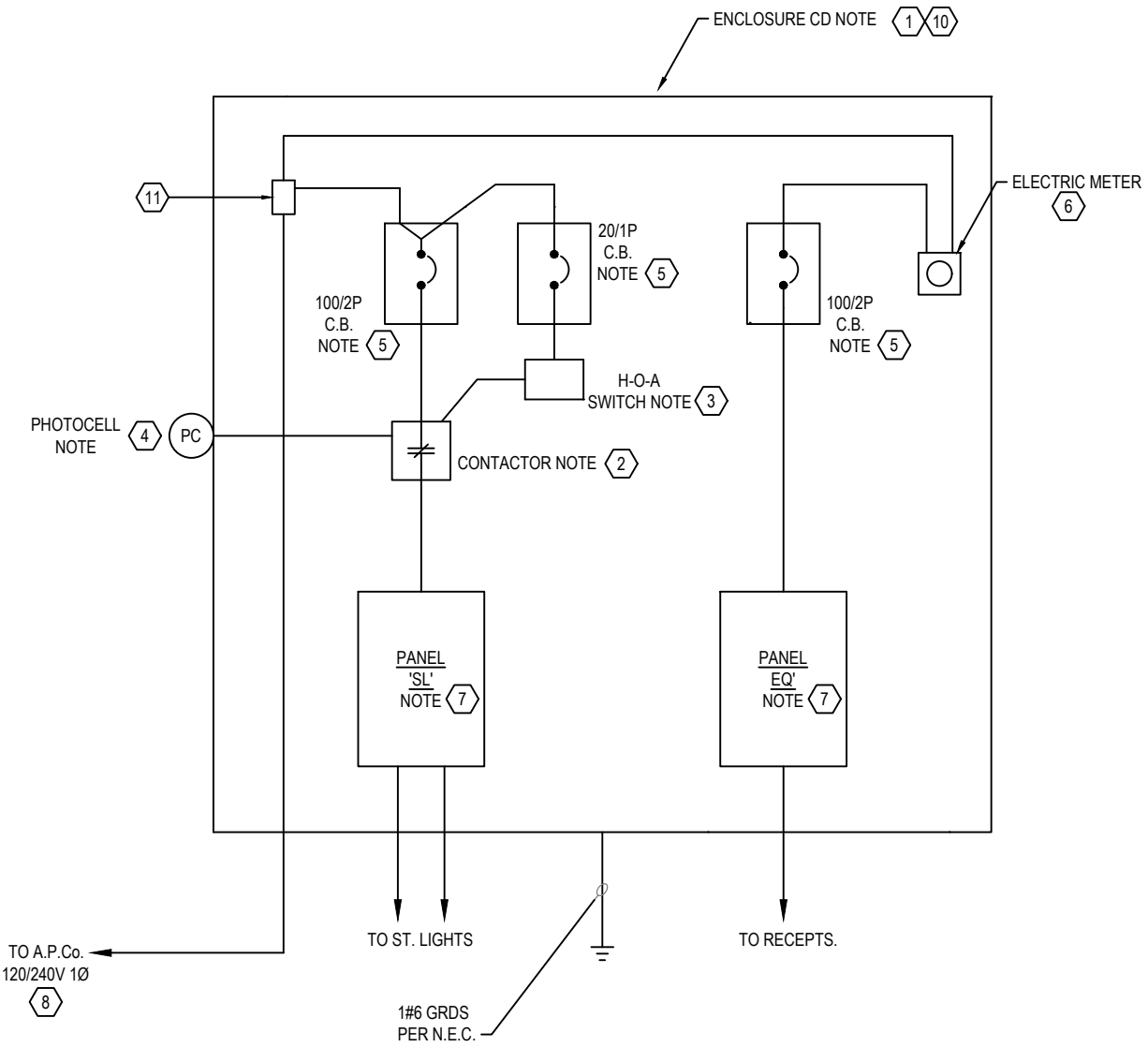

STANDARD DETAILS: TRAFFIC	2.13
DEPARTMENT: ENGINEERING	REVISIONS:
SCALE: N.T.S.	
DRAWN BY: GINA McCRICKARD	
CITY ENGINEER: Alison Frazier	
APPVD. BY: Alison Frazier	
IMPLEMENTED: 01-01-2022	

City of Auburn

TYPICAL "B" AND "M" SIZE
CONSTRUCTION & INSTALLATION

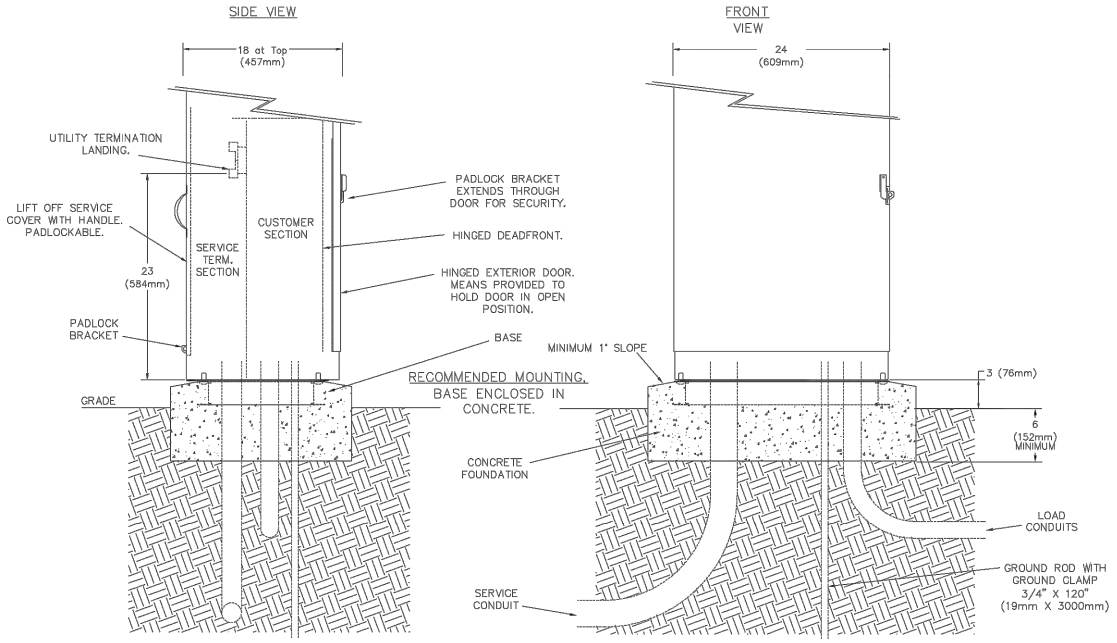

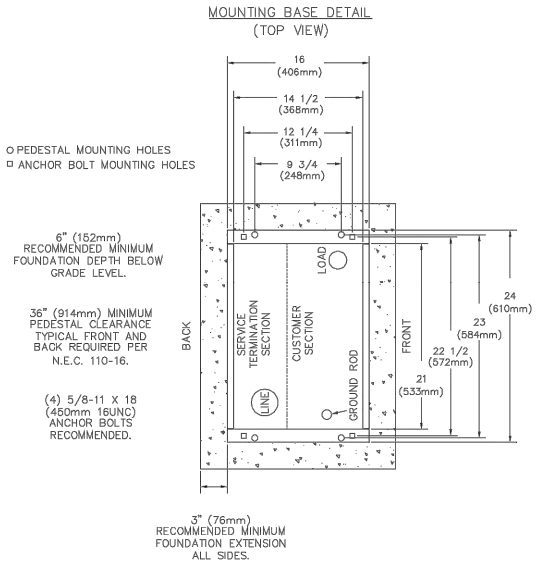

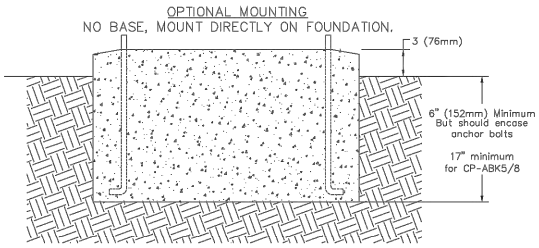

STANDARD DETAILS: TRAFFIC	2.14
DEPARTMENT: ENGINEERING	REVISIONS:
SCALE: N.T.S.	
DRAWN BY: GINA McCRICKARD	
CITY ENGINEER: Alison Frazier	
APPVD. BY: Alison Frazier	
IMPLEMENTED: 01-01-2022	

City of Auburn

R-Size Outline EXP MTR

24" COMMERCIAL PEDESTAL

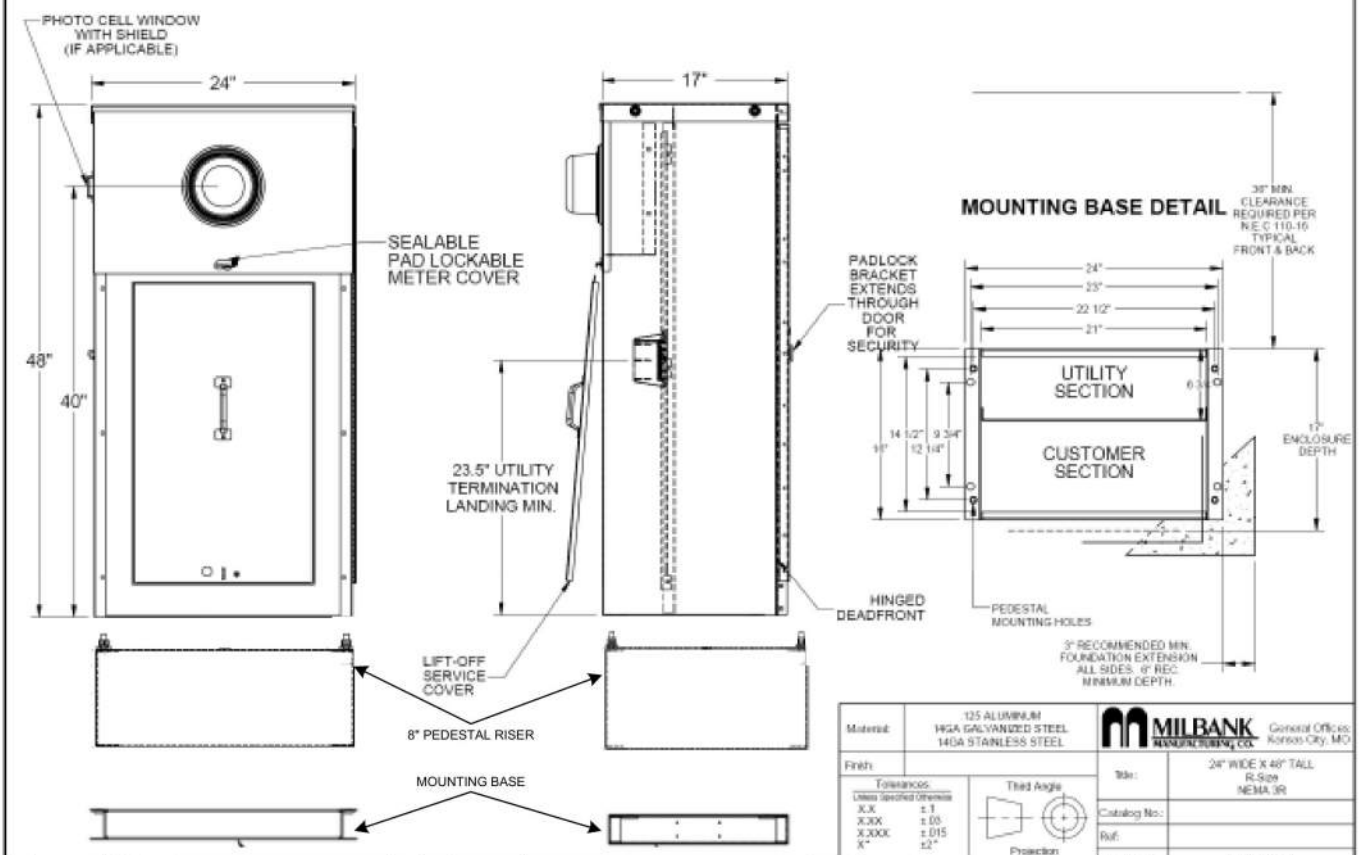

**	02-19-09	PROTO TYPE	TB
A	03-07-11	REMOVE ANCHOR BOLT WORDING ECR00001694	TB

Material:	12G ALUMINUM 14GA GALVANIZED STEEL 14GA STAINLESS STEEL	MILBANK MANUFACTURING CO.	General Offices: Kansas City, MO
Finish:		Title:	24" WIDE X 48" TALL R-Size NEMA 3R
Tolerances: Unless Specified Otherwise X.XX ±.1, X.XXX ±.05, X.XXX ±.015, X° ±2°	Third Angle Projection	Catalog No.:	
		Ref:	
Scale: NTS	Checked By:	Drawing No.:	R-SIZE
Drawn By:	Approved By:	Date: 5-3-07	Sheet 1 of 2

STANDARD DETAILS: TRAFFIC	2.15
DEPARTMENT: ENGINEERING	REVISIONS:
SCALE: N.T.S.	
DRAWN BY: GINA McCRICKARD	
CITY ENGINEER: Alison Frazier	
APPVD. BY: Alison Frazier	
IMPLEMENTED: 01-01-2022	

City of Auburn

Catalog Number:

CP3B5212BRBKSL1

TYPE A

120/240 VAC, 1-phase, 3-wire; 200 Amps Maximum, (see Main circuit breaker rating)
Rainproof - Type 3R, Galvanized (G90) steel Enclosure, painted BLACK (RAL 9017)
Enclosed Industrial Control - Suitable ONLY for Use as Service Equipment
The short circuit current rating is 10,000 RMS symmetrical amperes maximum at 240volts maximum, in accordance with the table below, but is limited to the lowest short circuit rating of any installed circuit breaker. Watthour meter is not included in the short circuit rating. Replacement circuit breakers must be of the same type and rating.

METERED CIRCUIT DIRECTORY (PANEL EQ)

No.	Amp.	Poles	Circuit Description	No.	Amp.	Poles	Circuit Description
1	20	1	RECEPTS	2	20	1	RECEPTS
3	20	1	RECEPTS	4	20	1	RECEPTS
5	20	1	RECEPTS	6	20	1	RECEPTS
7	20	1	RECEPTS	8	20	1	RECEPTS
9	20	1	RECEPTS	10	20	1	RECEPTS
11	20	1	RECEPTS	12	20	1	RECEPTS
13				14			
15				16			
17				18			
19				20			
21				22			
23				24			

AIC RATING	MAIN (METERED)	BRANCHES (METERED)
10	Siemens type BQ	Siemens type BQ, QP

UNMETERED CIRCUIT DIRECTORY (PANEL SL)

No.	Amp.	Poles	Circuit Description	No.	Amp.	Poles	Circuit Description
1	20	1	STREET LTS	2	20	1	STREET LTS
3	20	1	STREET LTS	4	20	1	STREET LTS
5	20	1	STREET LTS	6	20	1	STREET LTS
7	20	1	STREET LTS	8	20	1	STREET LTS
9	20	1	STREET LTS	10	20	1	STREET LTS
11	20	1	STREET LTS	12	20	1	STREET LTS
13				14			
15				16			
17				18			
19				20			
21				22			
23				24			

AIC RATING	MAIN (UNMETERED)	BRANCHES (UNMETERED)
22	Siemens type BQ	Siemens type BQ, QP

Circuit breaker handle trip position is between "ON" and "OFF". To reset breaker, move handle to the full "OFF" position, then to full "ON".

Terminal Information, Use AL/CU conductors

FIELD WIRED CONNECTORS					BUS CONNECTIONS			For Equipment Ground ONLY, multiple conductors in a single opening are permissable as indicated below		
		SLOTTED HEAD SCREWS			THREADFORMING SCREWS					
Socket Size	Torque Lb.-In.	AWG Wire Size	Torque, Lb.-In. Small Hole	Torque, Lb.-In. Large Hole	SCREW	MAT'L	Torque, Lb.-In.	AWG Wire Size	Small Hole	Large Hole
5/16"	275	#14-10	20	35	10-24	AL	30	#14-10	1-2	1-2
3/8"	375	#8	25	40	10-24	CU	50	#10	1	3
1/2"	500	#6	35	45	¼-20	AL	50	#8 - 6	1	1
9/16"	600	#4	-	45	¼-20	CU	72	#4 - 1/0		1
		#3-1/0	-	50						

Shipping may loosen electrical connections. CHECK TIGHTNESS BEFORE ENERGIZING.

BONDED NEUTRAL – Remove neutral load conductors for test purposes only! FIELD INSTALLED conductors shall be 60°C, 75°C, or 90°C, sized to 60°C rating for 110 amps or less; and 75°C or 90°C for 125 amps and above.

MADE IN U.S.A.

MILBANK ENERGY AT WORK

STANDARD DETAILS: TRAFFIC 2.16

City of Auburn

DEPARTMENT: ENGINEERING	REVISIONS:
SCALE: N.T.S.	
DRAWN BY: GINA McCRICKARD	
CITY ENGINEER: Alison Frazier	
APPVD. BY: Alison Frazier	
IMPLEMENTED: 01-01-2022	

Catalog Number:

CP3B5212BRBKSL1

TYPE A

120/240 VAC, 1-phase, 3-wire; 200 Amps Maximum, (see Main circuit breaker rating)
Rainproof - Type 3R, 304 Galvanized (G90) steel Enclosure, painted BLACK (RAL 9017)
Enclosed Industrial Control - Suitable ONLY for Use as Service Equipment

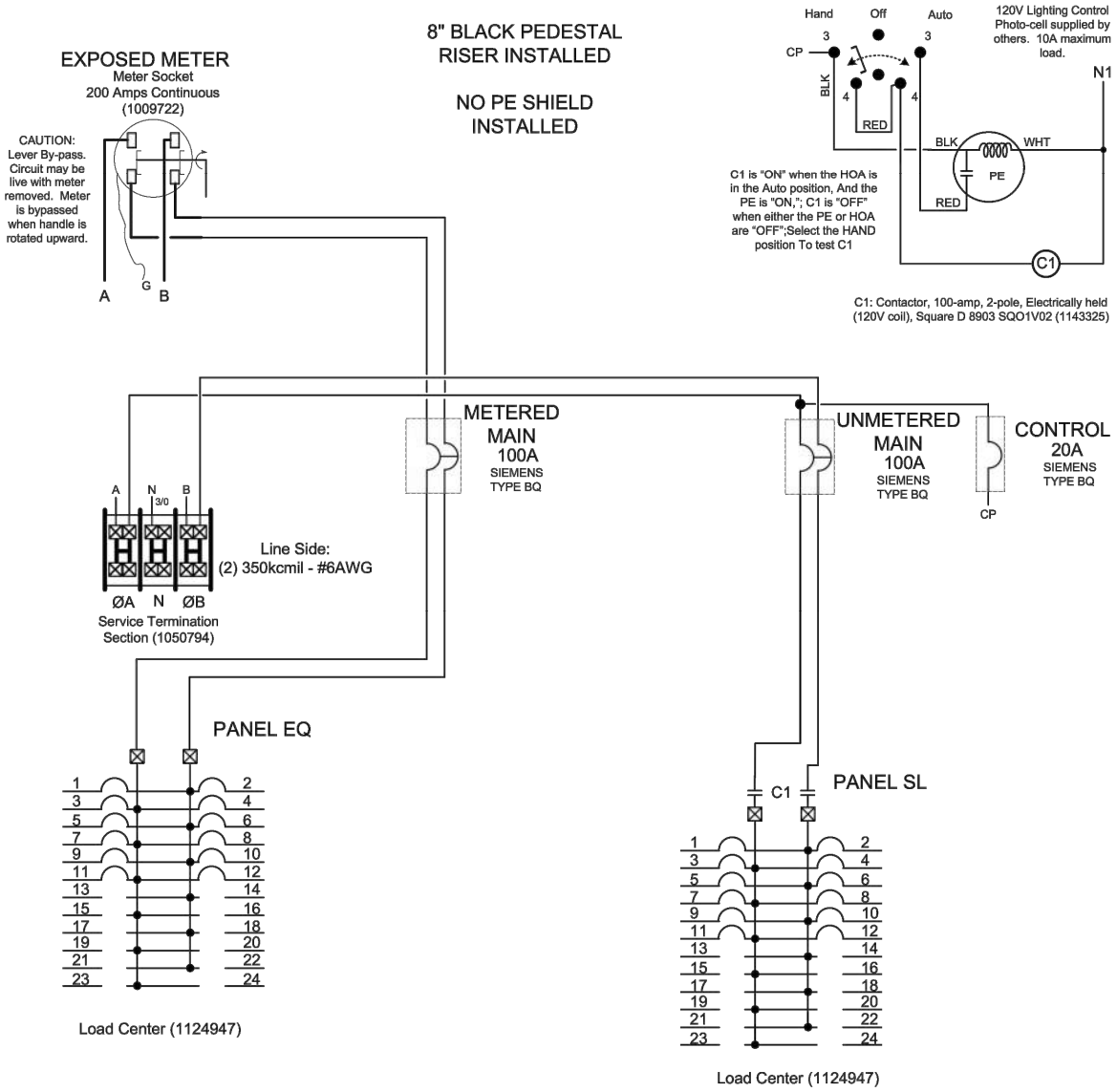

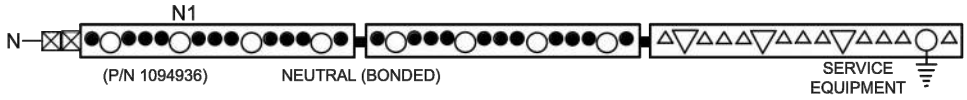

MADE IN U.S.A.

Sheet 2 of 2

MILBANK ENERGY AT WORK

STANDARD DETAILS: TRAFFIC	2.17
DEPARTMENT: ENGINEERING	REVISIONS:
SCALE: N.T.S.	
DRAWN BY: GINA McCRICKARD	
CITY ENGINEER: Alison Frazier	
APPVD. BY: Alison Frazier	
IMPLEMENTED: 01-01-2022	

City of Auburn

SP Series Specifications

ELECTRICAL

Input

Voltage	120 VAC +12%, -29% (without battery discharge)
Frequency	48 to 62 Hz

Output

Voltage	120 VAC +3%
Frequency	50 or 60 Hz
Rating:	SP 1000 SR/SN 1,250 VA/875 Watts SP 1250 SR/SN PLUS 1,250 VA/875 Watts[1] SP 2000SR/SN/U 2,000 VA/1400 Watts
Crest Factor Ratio (Non-linear Load and < 5% THD) Typical	@50% Load Up to 4.8:1 @75% Load Up to 3.2:1 @100% Load Up to 2.4:1
Total Harmonic Distortion (THD)	4.0% Max.
Dynamic Response	±4% for 100% Step Load Change 0.5 ms Recovery Time
Overload	110% for 10 sec; 200% for .05 sec
UPS Protection	Input and Output Short Circuit; Input and Output Overload; Excessive Battery Discharge

ENVIRONMENTAL

Operating Temp.	-40°C to +74°C (-40F to+165°F)
Humidity	0% to 95% Non-condensing
Altitude	Sea Level to 10,000 ft (some derating of temp. w/altitude > 6,000 ft)

MECHANICAL

Input	Hardwired to PIM
Outputs	Hardwired to PIM, w/single 15 Amp Receptacle on back of UPS
Cabinet	NEMA, 332 or CBO-123 Cabinet Style Configurations Available; NEMA 3R Type II and Type III Optional

CUSTOM Options

Consult Factory for other Custom options

DESIGN

Standard Features	Power Factor Corrected Input; Fully Regenerative; True On-Line Continuous Power; Low Distortion Sinewave Output; Designed for Non-linear Loads; Extended Brownout Protection; EIA/RS232 Data Interface
Specifications	Meets FCC Class A, IEEE 587/ANSI C62.41, IEC 555 @ 120 VAC and NEMA Stds
MTBF	Inverter: > 100,000 hrs System w/Bypass: 150,000 hrs Calculated from Component Spec
Typical Recharge Time to 85% Capacity @ 100% Load	48-72 hrs (more time required with extended battery option) Less than 20 hrs with optional Fast Battery Charger

CONTROLS AND INDICATORS

Ramping LEDs	Battery Level; Load Level
Single LEDs	AC In; Inverter On; Low Battery and Summary Alarm; Alarm Silence
Control Panel	Power On; Cold Start; Test; Alarm Silence; Event Counter (w/Reset); Hour Meter; Battery Disconnect
Audible Alarms	Utility Interrupt; Inverter Failure; Overload; Low Battery; Self Test
Serial Interface for EIA 232. Optional NTCIP and TCP/IP via Standard RJ45 Connector	Full Interactive Remote Computer Monitoring and Control of Most Features Including Load Control (requires optional monitoring software); NTCIP and TCP/IP Ready
Contact Closures ("D" connector)	Open Collector for Remote Annunciation of Power Up, Power Down, On Battery, Low Battery and Alarms

Specifications subject to change without prior notice.

Uninterruptible Power for Traffic Signal Applications - 1000, 1250 and 2000VA

Model	VA	Watts	Input Current (A)	Output Current (A)	Backup Time 100% / 50% Load	Unit Weight (lbs)	Rackmount H x W x D (in)
SP1000SN/SR[2]	1,250	875	8.8	10.4	1.5 hrs. / 3.25 hrs.	20	3.50 x 19.0 x 13.0 (2U)
SP1250SN/SR Plus[1,2]	1,250	875	8.8	10.4	1.5 hrs. / 3.25 hrs.	20	3.50 x 19.0 x 13.0 (2U)
SP2000SN/SR[2]	2,000	1400	18.0	20.0	15.0 min. / 35.0 min.	30	5.25 x 19.0 x 17.0 (3U)
SP1250U	1,250	875	8.8	10.4	1.5 hrs. / 3.25 hrs.	20	3.50 x 19.0 x 13.0 (2U)
SP2000U	2,000	1400	18.0	20.0	15.0 min / 35.0 min	30	5.25 x 19.0 x 17.0 (3U)

Note 1 Supports 1400 watt peak load for 10 seconds or less, intended for yellow incandescent applications.
Note 2 Requires Clary PIM30C, G, R, or GR for traffic applications.

CLARY®
The Continuous Power Company™

Clary Corporation
150 E Huntington Drive Monrovia, Ca 91016
Tel: 800.442.5279 • Fax:626.305.0254
• www.clary.com

Made in the USA

P/N 520-13481
08/04/06-Ver. 1.4

This page intentionally left blank.

RX11 LED Signal Modules

- 8 and 12 inch

Mechanical Outline

Dimensions in inches. (mm) indicates metric equivalent

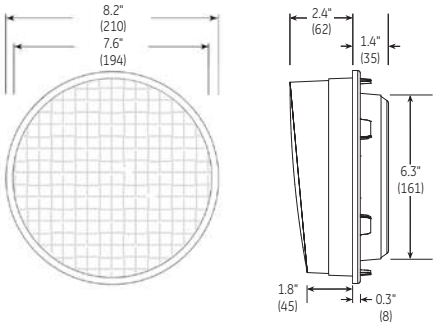

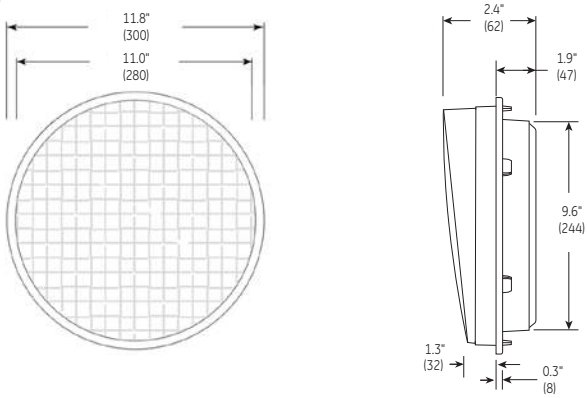

Design Compliance

Test Type	Compliance
Luminous Intensity	ITE VTCSH-STD Part 2 - July 1998
Chromaticity	ITE VTCSH-STD Part 2 - July 1998
Moisture Resistance	NEMA STD 250 Type 4 - 1991
Mechanical Vibration	MIL-STD-883 Method 2007
Electronic Noise	FCC Title 47 Sub. B Sec 15[1]
Transient Voltage Protection	ITE VTCSH-STD Part 2 - July 1998
Controller Compatibility	NEMA TS-2-1992
Wiring	National Electric Code

[1] Class A

Operating Specifications

Parameter	Rating
Operating Temperature Range	-40 to + 74°C (-40 to +165°F)
Operating Voltage Range	80 to 135 V (60Hz AC)
Power Factor (PF)	> 90 %
Total Harmonic Distortion (THD)	< 20 %
Voltage Turn-off (VTO)	45 V
Lens & Shell Material	UV Stabilized Polycarbonate
Wiring	16 AWG, Color Coded with Strain Relief

Product Information

Model Number	Size (in)	AC Voltage	Power (W)	Wavelength (nm)	Maintained Intensity (Cd)
		Nominal	Nominal	Dominant	Minimum[2]
DR4-RTFB-20A	8	120V – 60 Hz	5	626	133
DR4-YTFB-20A	8	120V – 60 Hz	13	589	267[3]
DR4-GTFB-20A	8	120V – 60 Hz	6	508	267
DR4-GCFB-20A	8	120V – 60 Hz	6	508	267
DR6-RTFB-20A[4]	12	120V – 60 Hz	10	626	339
DR6-YTFB-20A	12	120V – 60 Hz	22	589	678[3]
DR6-GTFB-20A	12	120V – 60 Hz	12	508	678
DR6-GCFB-20A	12	120V – 60 Hz	12	508	678

Options :
- Q : Quick Connect
- S : Medium Base Socket
- F : In-line Fuse

Standard product equipped with spade connectors.
[2] Measured at +2.5°H -2.5°V, T_a = 25°C.
[3] Actual intensity less than ITE VTCSH-STD Part 2 - July 1998.
[4] May exceed maximum intensity of ITE VTCSH-STD Part 2 - July 1998.

Distributed by:

6180 Halle Drive • Valley View, Ohio 44125-4635, • USA
P: 216.606.6555 • F: 216.606.6599 • www.led.com • signals@led.com

For customer service & technical support, contact:
1-888-MY-GE-LED (1.888.694.3533)

Lumination, LLC is a subsidiary of the General Electric Company. The GE brand and logo are trademarks of the General Electric Company.
© 2008 Lumination, LLC. Information provided is subject to change without notice. All values are design or typical values when measured under laboratory conditions.

LED Array Pedestrian Countdown Signals

- 16 X 18 inch module

Mechanical Outline

Dimensions in inches. (mm) indicates metric equivalent

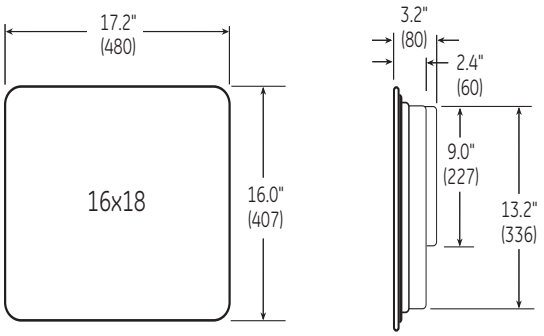

Design Compliance

Test type	Compliance
Luminous intensity	ITE Pedestrian Traffic Control Signal Indication - Part 2: Light Emitting Diode (LED) Pedestrian Traffic Signal Modules Section 4.1.1 (applies to: Hand & Person only)
Chromaticity	ITE PTCSI-STD - Part 2
Moisture Resistance	NEMA STD 250 Type 4 – 1991
Mechanical Vibration	MIL-STD-883 Method 2007
Electronic Noise	FCC Title 47 Sec 15 Sub. B[1]
Transient Voltage Protection	ITE PTCSI-STD - Part 2
Controller Compatibility	NEMA TS-2-1992
Wiring	National Electric Code

[1] Class A

Operating Specifications

Parameter	Rating
Operating Temperature Range	-40 to +74°C (-40 to +165°F)
Operating Voltage Range	80 to 135 V (60Hz AC)
Power Factor (PF)	> 90 %
Total Harmonic Distortion (THD)	< 20 %
Voltage Turn-Off (VTO)	45 V
Lens & Shell Material	UV Stabilized Polycarbonate
Wiring	16 AWG, Color Coded with Strain Relief
LED Color	Hand: Portland Orange Person: Lunar White Countdown: Portland Orange

Product Information

Model Number	Operating Cycle	Configuration	Symbol			AC Voltage	Power (W)			Figure
			Hand	Person	Countdown	Nominal	Hand	Person	Countdown	
PS7-CFF1-01A-18[2]	Clearance	Overlay/ Countdown	Full	Full	2 Rows/ 9" high	120V – 60Hz	9	8	5	A
PS7-CFL1-01A	Overlay	Overlay	Full	Full	–	120V – 60Hz	9	8	–	B

[2] Full MUTCD Compliance
Standard product shipped with spade connectors.
Test Conditions: T_a = 25°C
Options: Q – Quick Connect, MB – For GTE Winkomatic (16 7/8" x 16 1/4") Housing, MC – For Econolite (18" x 15 5/8") Housing.

Figure A

Figure B

Distributed by:

6180 Halle Drive • Valley View, Ohio, 44125-4635, USA
P: 216.606.6612 • F: 216.606.6599 • W: www.led.com • E: signals@led.com

Lumination is a subsidiary of the General Electric Company. The GE brand and logo are trademarks of the General Electric Company.
© 2007 Lumination, LLC. Information provided is subject to change without notice. All values are design or typical values when measured under laboratory conditions.

TRAF058-R012808

SECTION 3

3.0 TRAFFIC CALMING

3.1 TRAFFIC CALMING PROCESS SUMMARY

Traffic calming is a means in which to reduce speeds and minimize vehicular traffic on local neighborhood streets. Citizen involvement in neighborhood traffic management activities is strongly encouraged. This section is intended to aid citizens in resolving traffic problems in residential areas. In the City, traffic calming techniques are limited to local residential streets. A *local residential street* is defined as all minor streets, marginal access streets, residential collectors and cul-de-sacs primarily serving residential property.

The following procedures are considered typical for receiving, responding to, and managing citizens' requests for residential traffic management on their streets or in their neighborhoods. Variations in this process may be approved by the City Council when deemed appropriate due to unique circumstances.

When a neighborhood representative contacts City Staff to discuss neighborhood traffic problems or concerns, the representative will be asked to complete a Traffic Calming Request Form and submit it to the Traffic Engineer's office. These forms may be obtained by contacting the Engineering Services Department – Traffic Engineering Division. A Traffic Calming Request Form is available online at https://www.auburnalabama.org/engineering-services/request/. Once the application has been submitted, the Traffic Engineer will evaluate the need for a traffic calming technique and, if one is warranted, will determine the type of technique to be installed. If a traffic calming technique is found to not be warranted, the re-evaluation of the request may only be reviewed after a period of one (1) year with the submission of a new application.

If physical traffic calming measures are warranted, a neighborhood petition from the "affected area" is required, and the Traffic Engineer will notify the representative of this additional requirement. The "affected area" is defined as those properties along streets expected to receive traffic calming techniques, those streets whose access is substantially dependent upon the streets to be calmed, and any streets expected to receive significant increases in traffic volume or type as a result of the traffic calming technique installation. The City Engineer shall be responsible for final approval of the affected area to be petitioned.

Once the completed petition reflecting a positive response has been returned to the Traffic Engineer, the City Engineer will make the final recommendation to the City Manager. The City Manager will place the item on the agenda for consideration by the City Council. If approved by the City Council, the project will be scheduled for construction by the City of Auburn Public Works Department.

3.2 EXISTING CONDITION ANALYSIS

The Traffic Engineering Division of the Public Works Department will perform any necessary data collection and analysis to assess and quantify the traffic and safety conditions in the neighborhood. The Engineering Services Department staff will identify the tentative study area, collect preliminary information from their files and other potentially affected agencies, and complete any needed traffic analysis. While there are no absolute minimum criteria or warrants established for use of traffic calming techniques, staff will refer to the following guidelines when evaluating the magnitude of traffic and safety problems, potential for improvement using traffic calming techniques, and establishment of priorities for project implementation.

3.2.1 Minimum Vehicular Volume

Traffic volumes on residential streets will determine the appropriate traffic calming measures as follows:

- Less than four thousand (4,000) vehicles per day: Education; Enforcement; Increased police enforcement for traffic violations (i.e. speeding); and Physical techniques;
- More than four thousand (4,000) vehicles per day: Education; Enforcement; Increased police enforcement for traffic violations (i.e. speeding); Alternative actions only - no physical techniques.

3.2.2 Speed

The ideal, acceptable and not acceptable traffic speeds on local streets are as follows:

TABLE 3.1
Vehicle Speeds on Local Streets

	Ideal	Acceptable	Not Acceptable
Average Speed – All Vehicles	0-25 mph	26-30 mph	31-35 mph
85th Percentile Speed	0-30 mph	31-35 mph	36-40 mph
95th Percentile Speed	0-35 mph	36-40 mph	41-45 mph
Percent of Vehicles in 10 mph Pace Speed	70%	60%	50%

3.2.3 Cut Through Traffic

A vehicle that detours through a neighborhood for the convenience of decreasing the amount of time it takes to reach a destination is known as cut through traffic. The volume of cut through traffic is typically quantified by estimating the expected traffic generated by a neighborhood based on the Institute of Transportation Engineers (ITE) *Trip Generation* Land Use 210 – Single Family Housing. The expected daily volume is divided by the actual daily traffic volume to calculate the percent of cut through traffic.

The acceptable and not acceptable percentages of cut through traffic are as follows:

TABLE 3.2
Cut Through Traffic

Classification	Acceptable	Not Acceptable
Local Street	0% - 25%	≥ 25%
Collector Street	0% - 50%	≥ 50%

3.2.4 Accidents

Accident problems are considered significant when there are three (3) or more reported accidents, including pedestrian, bicycle and auto accidents, along a residential street or within a neighborhood during a period of twelve (12) consecutive months.

3.2.5 Street Grades and Alignment

Traffic calming are not typically installed on streets with grades exceeding eight (8%) percent, or where a combination of vertical and horizontal alignment would result in inadequate stopping sight distance for motorists encountering traffic calming measures.

3.2.6 Transit, School and Emergency Routes

Traffic calming techniques are not typically installed on streets serving as designated transit routes or primary emergency access routes. School authorities should be consulted in conjunction with proposed traffic calming techniques if a school route is considered.

3.3 RESULTS OF TRAFFIC CALMING ANALYSIS

Utilizing the information gathered from analysis and speed studies, the Traffic Engineer will determine the type of technique to be installed.

Table 3.3 "Recommended Traffic Calming Techniques" is a listing of speed requirements and recommended devices that could be used to address speeding. These techniques are in order from less intrusive to more intrusive. No traffic calming measures will be recommended for any collector or arterial street as shown on the Street Classification Map or any street with a traffic volume of over four thousand (4,000) vehicles per day.

TABLE 3.3
Recommended Traffic Calming Techniques

85th Percentile Speed above posted speed limit	Traffic Calming Technique Recommended
0 – 5 mph	Not recommended
5 – 10 mph	Street narrowing or surface roughing
10 mph and above	Speed table or combination of techniques

Examples of various traffic calming measures are provided in Appendix J of this Manual.

3.4 NEIGHBORHOOD PETITIONS AND COST SHARE

When a proposed technique is approved by the City Engineer, the Traffic Engineer will prepare a petition package to be circulated by the Applicant. The petition will include the name and address of each of the property owners in the affected area as well as the description and detail of the proposed technique. The Applicant can pick up the petition package or arrange to have it mailed.

It is the responsibility of the representative to circulate the petition within the affected area. The petition must be delivered (in a legally acceptable manner) or offered to all property owners in the affected area. A positive response must be obtained by sixty-six (66%) percent or more of the total number of properties in the affected area to proceed further with the traffic calming project design and implementation. The petition must be returned to the Traffic Engineer within three (3) months of receipt of the petition package by Applicant.

Any neighborhood that does not meet the traffic calming warrant outlined in this manual may request City Council approval to circulate a petition for installation of a physical device. This petition shall require a positive response of eighty (80%) percent or more for installation of the device to be considered by City Council.

The installation cost of calming techniques may be shared with the City and the neighborhood requesting the technique. If the City's standard materials are used, there will be no cost to the neighborhood. If decorative or non-standard measures are desired, the neighborhood will incur the additional cost for the specialty items.

3.4.1 Standard Materials

The standard technique will be either a rubberized or concrete speed hump or City mountable curb surrounding a concrete island. Signs in accordance with MUTCD will be installed for visibility around the outer perimeter and approaches on City standard green U-channel posts.

3.4.2 Landscaping

An island may contain drought tolerant landscaping or hardscape. A tree may be positioned in the center as necessary for visibility concerns. Vegetation shall be approved by the City Arborist prior to installation. A water spigot may be included as part of landscaping for maintenance of vegetation. Any necessary property dedication or landscape maintenance agreement shall be completed prior to final project design.

3.4.3 Exceptions – Special Material/Landscaping Requests

Should a neighborhood prefer a more decorative final product, a request of the design preferences shall be made to the Traffic Engineer. The request will be reviewed by the

Traffic Engineer and the City Engineer for safety and maintenance issues. If approved, the neighborhood shall be responsible for any additional costs incurred for all decorative elements. An agreement must be signed between the City and representatives of the subdivision and approved by the City Council with the traffic calming petition. This agreement may also include a maintenance element for the subdivision–to maintain the decorative elements.

3.5 REVIEW AND ANALYSIS OF APPLIED SOLUTIONS

All installations will be monitored and evaluated by Engineering Services Department Staff for desired effectiveness. The City will perform a review to evaluate the effectiveness of the applied technique after the residents and motorists have had adequate time to adjust to the change. Evaluation of the project includes resident and motorist reaction, field observation, traffic counts, speed studies, and other data collection as needed. If the project has not met its objectives within the monitoring period, the City Engineer will provide additional information to the City Manager who will inform the City Council.

3.5.1 Removal

Removal will only be considered after one (1) year and after a new petition with sixty-six (66%) percent response for removal is approved by the City Council, or if field conditions have changed which justify removal as recommended by the City Engineer and approved by the City Council.

3.5.2 Re-Evaluation

The re-evaluation of a previously denied request may only be reviewed after a period of one (1) year with the submission of a new application.

3.6 CONSTRUCTION

When a traffic calming project has received the necessary petition support, the City Engineer will schedule design and implementation of the project within budgetary constraints. All designs shall follow ITE or other nationally recommended guidelines, if available. Depending upon the number of traffic calming requests received, a project may be placed on a waiting list and prioritized based on relative need. Certain techniques may be installed for a "test period" while others may be installed in a permanent fashion.

3.6.1 Material Submittal

Specifications are required to be submitted for all decorative elements requested by the Applicant. Installation of requested material is based on the approval of the City Engineer.

3.6.2 Test Requirements

The subdivision/home owners association will be responsible for the costs incurred for all testing services required for non-standard, decorative elements through the neighborhood cost share program.

3.6.3 Inspection

The subdivision/home owners association will be responsible for the costs incurred for all inspection services required for non-standard, decorative elements through the neighborhood cost share program.

3.6.4 Maintenance

Maintenance of traffic calming techniques will be the responsibility of the City, unless a subdivision or home owners association has a written agreement with the City to maintain the area.

APPENDIX J. Examples of Traffic Calming Measures

This page intentionally left blank.

APPENDIX J. Examples of Traffic Calming Measures:

Traffic calming involves two (2) types of devices to influence vehicle operation and driver behavior: 1) Vertical devices, such as speed humps or speed cushions; and 2) Horizontal devices, or street narrowing, such as chicanes, pinch points, traffic circles, and median islands.

J-1 Speed Humps / Speed Tables

Speed humps/cushions are rounded raised areas placed across the roadway. They are generally ten (10) to fourteen (14) feet long, and are three (3) to four (4) inches high. The profile of a speed hump can be circular, parabolic, or sinusoidal. They are often tapered as they reach the curb on each end to allow unimpeded drainage. Speed humps may increase noise due to braking, acceleration and vertical displacement of vehicles.

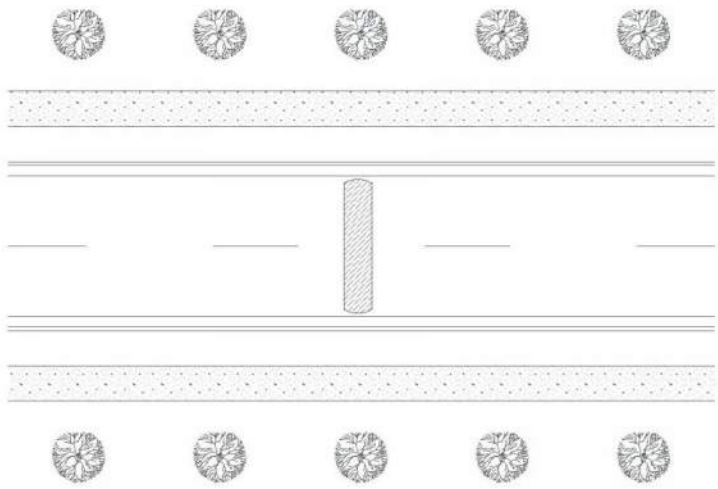

FIGURE 1
Example of a Speed Hump

Speed tables are flat-topped speed humps often constructed with brick or other textured materials on the flat section. Speed tables are typically long enough for the entire wheelbase of a passenger car to rest on the flat section. Their long flat fields give speed tables higher design speeds than Speed Humps. The brick or other textured materials improve the appearance of speed tables, draw attention to them, and may enhance safety and speed-reduction. Speed tables are good for locations where low speeds are desired but a somewhat smooth ride is needed for larger vehicles, or where flat surface is needed to function as a raised crosswalk.

J-2 Textured Pavements / Surface Roughing

Textured pavements, or surface roughing, are a traffic calming measure consisting of a change in typical roadway surface material with the use of brick, concrete pavers, stamped asphalt/concrete, or rumble strips. This treatment can be used on the entire footprint of an intersection or on individual raised or at-grade crosswalks. A textured treatment has the effect of increasing driver awareness to the idea that vehicles share the

space pedestrians and bicyclists. Textured pavements are also associated with reduced travel speeds. This type of traffic calming measure is useful in areas where the loss of on-street parking would be unacceptable.

J-3 Pinch Points

Pinch points are curb extensions at intersections or in mid-block areas that reduce the roadway width from curb to curb. They create a pedestrian-friendly environment by shortening crossing distances for pedestrians. When applied at intersections, they also tighten the curb radii at the corners, reducing the speeds of turning vehicles.

FIGURE 2
Example of a Pinch Point

J-4 Chicanes

Chicanes are mid-block curb extensions that alternate from one side of the street to the other, forming S-shaped curves. Chicanes can also be created by alternating on-street parking, either diagonal or parallel, between one side of the street and the other. Each parking bay can be created either by restriping the roadway or by installing raised, landscaping islands at the ends of each parking bay. This technique is also suitable for use with pairs off-set T-intersections.

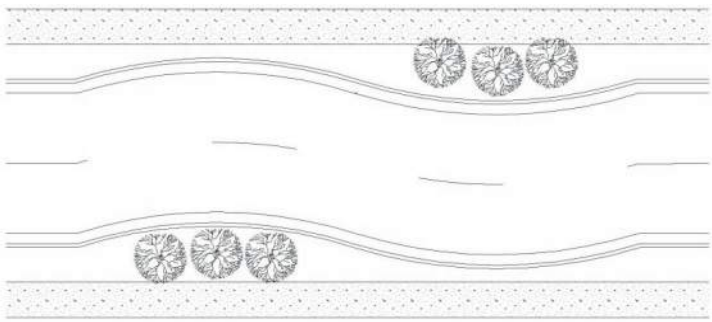

FIGURE 3
Example of a Chicane

J-5 Traffic Circles

Traffic circles are raised islands, placed in intersections, around which traffic circulates. Traffic circles, or mini-roundabouts, reduce the number of conflict points in an intersection and physically reduce speeds.

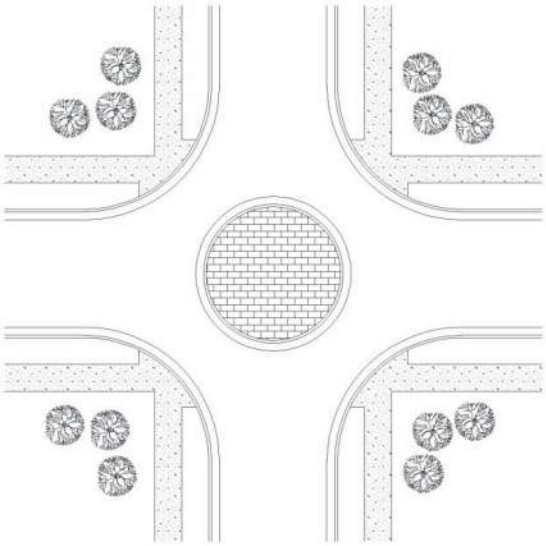

FIGURE 4
Example of a Traffic Circle

J-6 Median Islands

A median island is a raised barrier located along the centerline of a street that narrows the travel lanes at that location. When placed at the entrance to a neighborhood, it can provide positive indication that a driver is entering a residential area. If designed well, median islands can have positive aesthetic value, providing a landscaping opportunity.

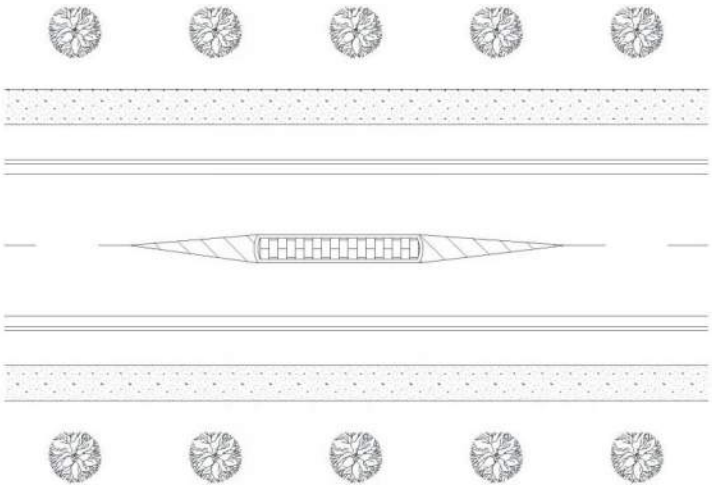

FIGURE 5
Example of a Median Island

J-7 Cut Through Closures

Partial or full road closures are often used to address the issue of cut through traffic. Full street closures can include landscaped islands, walls, gates, or bollards or any other type obstruction constructed in existing roadways to prevent the passage of vehicles. Barriers can also be constructed diagonally across an intersection to divert traffic and prohibit the through movement across the intersection.

FIGURE 6
Example of a Full Road Closure

Partial or half closures are barriers that restrict traffic to one-way travel for a distance approaching or departing an intersection.

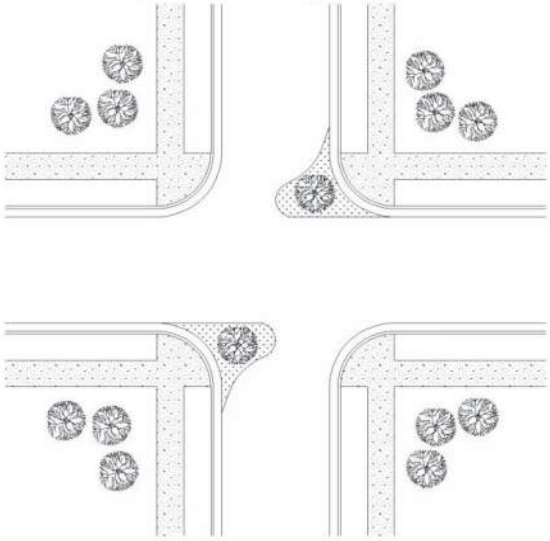

FIGURE 7
Example of a Partial Road Closure

SECTION 4

4.0 TRAFFIC IMPACT STUDIES

4.1 TRAFFIC IMPACT STUDY REQUIREMENTS

The City has established Traffic Impact Study (TIS) requirements for the purpose of ensuring that both the quantitative and qualitative aspects of traffic circulation impact on the citizens, neighborhoods and businesses of the City are considered and properly mitigated. Application of these standards is intended to appropriately regulate and balance the increased traffic flow generated by development with the need to reasonably preserve the quality of life and the environment within our community and to reasonably ensure pedestrian and bicycle safety as alternate modes of transportation.

4.1.1 General

The transportation impact report shall identify the traffic impacts and potential problems to be generated by a proposed use, and improvements required to ensure safe ingress and egress from a proposed development, maintain street capacity, and eliminate hazardous conditions. The following requirements have been established for the preparation of TIS for development proposals of all land use types. These policies exist to ensure consistent and proper traffic planning and engineering practices are followed when land use actions are being considered. The requirements provide a standard process, set of assumptions, set of analytic techniques, and a presentation format to be used in the preparation of the TIS. The TIS shall be submitted with or before the DRT plan submission.

4.1.2 Applicability

Developers and/or property owners shall be required to conduct TIS, as described herein, for all proposed development that meet any or all of the following:

- When traffic generated by the proposed development would cause the daily or peak hour traffic volumes on adjacent streets that serve as access for the development to exceed the limits outlined in this Manual in Section 5.0 "Roadway Design" in Table 5.1 "Maximum Roadway Volumes by Classification";
- When a development proposes to access a collector or arterial roadway and the proposed development is larger than the thresholds shown in Table 4.1 "Traffic Impact Study Thresholds by Land Use". The threshold shall be determined by the full buildout of the project, not by individual phases of the project. If a developer completes a project that does not meet the threshold established in Table 4.1, and later either builds subsequent phases of that project or builds a separate project on an adjacent or contiguous parcel of land to the previous project, the combined development size shall be used to determine if a TIS is required; or
- When in the opinion of the City Engineer, significant operational deficiencies, capacity deficiencies, and/or safety concerns on the surrounding roadways and

intersections currently exist or would be created as a result of the development's expected project.

- When a development build-out is not completed within 10-years of initial TIS analysis, an update to the TIS will be required for any new phases. The updated TIS will need to include updates for full build-out scenarios.

TABLE 4.1
Traffic Impact Study Thresholds by Land Use

Land Use	Size
Residential – Single Family	70 dwelling units
Residential – Townhomes/Condos	120 dwelling units
Residential – Apartments	100 dwelling units
Residential – Assisted Living	285 beds
Shopping Center	17,500 SF
Fast Food Restaurant with drive-thru	1,500 SF
High Turnover Sit-down Restaurant	5,900 SF
Quality Restaurant	8,300 SF
Gas/Service Station w/ convenience market	5 fueling positions
Bank with drive-thru	2,200 SF
Pharmacy with drive-thru	8,500 SF
Hotel/Motel	95 rooms
General Office	45,500 SF
Medical/Dental Office	21,000 SF
General Light Industrial	102,000 SF
Manufacturing	137,000 SF

The thresholds for land uses that are not depicted in Table 4.1 shall be based upon the level of development expected to generate approximately one hundred (100) peak hour trips or seven hundred fifty (750) daily trips, whichever is less.

Developers who are proposing projects are strongly encouraged to contact the City to discuss traffic impact requirements prior to submitting a rezoning application or subdivision/site plans to determine the TIS requirements for each project.

4.1.3 Applicant Responsibility

The responsibility for conducting a TIS and assessing the traffic impacts associated with an application for development approval rests with the Applicant. The assessment of these impacts shall be contained within a TIS report as specified herein. It shall be prepared under the supervision of, and sealed by, a licensed professional engineer in the State of Alabama with experience in traffic engineering and transportation planning/engineering.

For all State Highways within the study area, the Applicant is required to meet the requirements of ALDOT in addition to those of the City.

4.1.4 Capacity and Safety Issues

Development of property has a direct impact on transportation, including vehicular, transit, bicycle, and pedestrian traffic. In order to meet capacity and safety needs as they relate to the traffic generated from a particular land use, specific traffic circulation improvements should be made. The goal of the TIS is to address traffic related issues that result from development and to determine the improvements required to address and mitigate those issues such that street maximum capacities are not exceeded and traffic and pedestrian safety is maintained. The competing objectives of vehicular movement, pedestrians, bicyclists, and others must be balanced in the development review process. The TIS will provide information and guidance as plans are developed and decisions made for the proposed development plan.

4.1.4.1 Vehicular Traffic Improvements

Examples of traffic capacity and safety improvements to mitigate development impacts include: road widening, turn lanes, deceleration lanes, intersection through lanes, traffic signals, stop signs, design speed adjustments, modifications to access points, roundabouts and other traffic calming techniques as approved by the City.

4.1.4.2 Pedestrian Traffic Considerations and Improvements

Examples of street conditions that promote safe, comfortable and convenient pedestrian environments include: short blocks; lower prevailing travel speeds; sidewalks; well-defined crosswalks, median refuge areas and islands at street intersections. Walkway tunnels and overhead structures are examples of safety improvements that afford maximum protection for pedestrians.

4.1.4.3 Bicycle Traffic Improvements

The addition of on-street bicycle lanes or off-street bicycle paths may be needed to achieve connectivity between the proposed project and the existing bikeway system.

4.2 TRAFFIC IMPACT STUDY PROCEDURES AND CRITERIA

The following procedures have been established to outline the manner in which a TIS is to be conducted in the City.

4.2.1 Scoping Meeting/Telephone Conference

A scoping meeting/telephone conference prior to the submittal of a request for rezoning or site/development plan will be required and used to determine the study area, study parameters and documentation requirements for conducting a TIS for specific development proposals. The parameters determined in the scoping meeting/telephone conference represent general agreement between the City and the Applicant's consulting engineer, but they may not be all-inclusive. The City retains the right to require additional information and/or analysis to complete an evaluation of the proposed development project.

The Applicant is required to contact the City to arrange for a scoping meeting/telephone conference to discuss the TIS requirements and determine the base assumptions. It is incumbent upon the Applicant to discuss the following:

- Previous TIS prepared for the site, if any;
- Location of the site;
- Proposed access and its relationship to adjacent properties and their existing/ proposed access;
- Preliminary estimates of the site's trip generation and trip distribution at build-out;
- Identification of proposed year of build-out;
- Anticipated growth in traffic volumes between current and build-out conditions;
- Anticipated roadway improvements required to mitigate development impact;
- Phasing plan proposed, if any;
- Special analysis needs; and
- Other developments within the study area.

The scoping meeting/telephone conference shall conclude with the City and Applicant in mutual agreement with regard to determining the level of detail and extent to which the TIS will need to address each of the following:

- Study area for the impact analysis;
- Other developments within the study area;
- Existing intersection counts;
- Intersections and roadway segments to be studied in detail;
- Existing traffic volume forecasts;
- Anticipated growth in traffic from existing to build-out conditions;
- Location of the nearest bicycle and pedestrian facilities; and
- Special analysis needs (non traditional peak hour volumes for some uses, neighborhood impacts, access management plans, etc.).

4.2.2 Evaluation Elements

The key elements of the project TIS shall be specified by the City from the following list:

- Conformity with the transportation related policies of the City, including any other adopted access plans.
- Peak hour intersection and roadway level of service.
- Appropriateness of access locations;
- Location and requirements for left turn lanes or deceleration lanes at accesses or intersections. Taper lengths, storage length and deceleration lengths for turn lanes shall be designed as outlined in this Manual in Section 5.0 "Roadway Design";
- Sight distance evaluations and recommendations (intersection, stopping, passing);
- Continuity and adequacy of pedestrian and bike facilities;
- Recommended traffic control devices for intersections which may include two (2) way stop control, four (4) way stop control or yield signs, school flashers, school crossing guards, crosswalks, traffic signals or roundabouts.
- Traffic signal and stop sign warrants.
- Other items as requested by the City Engineer and agreed to in the scoping meeting/telephone conference.
- Neighborhood and public input issues.
- Classify streets within a development.
- Internal site circulation and flow.

4.2.3 Roadway Traffic Volumes/Traffic Counts

Current morning and afternoon commuter peak hour (7-9 A.M. and 4-6 P.M.) traffic counts as specified by the City Engineer shall be obtained for the roadways and intersections within the study area for one (1), non-holiday Tuesday, Wednesday, or Thursday. Each peak hour count shall be conducted over the designated hours (or as specified by the City Engineer) and shall include fifteen (15) minute count data to clearly identify the peak hours.

Weekend counts and/or average daily counts may also be required where appropriate and when required by the City Engineer. ALDOT Average Weekday Traffic (AWT) counts may be used when available. Pedestrian counts and bike usage should be obtained. Vehicle classification counts may be required.

In any case, these volumes shall be no more than two (2) years old (from the date of application submittal) unless otherwise deemed acceptable by the City Engineer. In areas that have experienced significant growth, the volumes shall be no more than one (1) year old from the date of application submittal.. The source(s) of each of the existing traffic volumes shall be explicitly stated (ALDOT counts, new counts by Applicant, etc.). Summaries of current traffic counts shall be provided. The City will require counts while both Auburn

University and Auburn City Schools are in normal school operation. If this cannot be done it must be approved by the City Engineer. The City will require the use of adjustment factors for data collected when either of these facilities is not in operation. Adjustment factors proposed for use in any TIS shall be submitted along with all supportive data to the City Engineer for review and approval. If in the opinion of the City Engineer, the proposed adjustment factors will not accurately reflect traffic conditions that would be in place during school operations, traffic count data will not be accepted and will require collection during those periods when the educational facilities are in operation.

In most cases, the actual completion of developments will occur at some time in the future. As part of the TIS, an annual growth rate of adjacent roadways and intersections will be developed. Growth rates utilized in the preparation of a TIS must be based on historical traffic growth, use of a regional travel demand model or other methods as approved by the City Engineer. Application of traffic growth shall be applied for buildout conditions and other interim development levels as required and approved by the City Engineer.

4.2.4 Intersection and Approach Level of Service

As a minimum, A.M. and P.M. peak hour intersection and approach Levels of Service (LOS) shall be determined for the existing signalized and unsignalized intersections at all study intersections and roadways. Additional intersections should be included in the analysis where post development conditions are considered by the City to be significant. The analysis shall use procedures as described in the *Highway Capacity Manual*, latest edition. Capacity analyses for intersections shall be based on individual approach lane LOS whereas impacts on roadways shall be based on daily traffic volumes and the specific roadway classification.

4.2.5 Trip Generation Rate

Trip generation rates utilized for conducting TIS in the City should be taken from actual rates developed and generated from land uses in the Auburn area. When data is not available for a proposed land use or for a land use unique to the Auburn area (University housing served by transit, etc.) is proposed, the Applicant must conduct a local trip generation study following procedures prescribed in the ITE *Trip Generation Handbook* and provide sufficient justification for the proposed generation rate. This rate must be approved by the City Engineer prior to its use in the TIS.

Dr. Brian Bowman, a professor at Auburn University, has conducted several studies to determine trip generation rates based on existing off-campus student housing within the City. The analysis included counting ingress and egress trips at existing developments and obtaining information about the ridership of Tiger Transit service to develop rates for student housing with transit service. The rates for apartment developments with no transit service were derived from the same developments, based on the assumption that if no transit service were available each transit rider would generate one (1) trip. The trip generation rates summarized in Table 4.2 "Trip General Rates for Off-Campus Student Apartments in Auburn" are based on previous studies from 2001 – 2006 and may be used as trip generation rates for student apartment developments within the City. Trip generation rates must be approved by the City Engineer prior to use in the TIS.

TABLE 4.2
Trip Generation Rates for Off-Campus Student Apartments in Auburn

Description	Trip Generation Rates*					
	AM Peak			PM Peak		
	Total	% In	% Out	Total	% In	% Out
Apartment development with no transit service	*0.24*	*17%*	*83%*	*0.49*	*54%*	*46%*
Apartment development with Tiger Transit service	*0.18*	*21%*	*79%*	*0.40*	*50%*	*50%*

* Trip Generation Rates based on number of beds in the Apartment development

If, in the opinion of the City Engineer, trip generation rates found in the ITE *Trip Generation Handbook*, latest edition, or other industry publications accurately reflect the trip generation characteristics of a particular land use proposed, that trip generation rate may be used in forecasting traffic to be generated by a development.

The ITE *Trip Generation Handbook* reports the weighted average rate and minimum and maximum observed rates, in addition to fitted curve equations for the various land uses. Typically, either the weighted average rate or the fitted curve equation is utilized. The development intensity should be compared to the minimum and maximum values to ensure the data falls within the range of information in the ITE *Trip Generation Handbook*, latest edition. The guidance provided by the ITE *Trip Generation Handbook* (2004) for selecting between the average rate and equation are summarized below.

Use the fitted curve equation when:

- A fitted curve equation is provided;
- The independent variable is within the range of data; or
- Either the data plot has at least twenty (20) points or the correlation coefficient R^2 is greater than or equal to 0.75, equation falls within the data cluster in the plot, and standard deviation is greater than one hundred ten (110%) percent of the weighted average rate.

Use the weighted average rate when:

- There are at least three (3) (preferably six (6)) data points;
- The independent variable is within the range of data;
- The standard deviation is less than or equal to one hundred ten (110%) percent of the weighted average rate;
- R^2 is less than 0.75 or no equation is provided; or
- The weighted average rate falls within the data cluster in the plot.

4.2.6 Preliminary Land Use Assumptions

The trip generation values contained in studies submitted prior to the establishment of a site

development plan shall be based on the maximum number of dwelling units permitted by the Zoning Ordinance for the approved land uses, and/or the maximum trip generation rates for the nonresidential development proposed land use action. When a TIS is being developed for a project with an established site development plan, trip generation shall be based on actual dwelling unit counts and square footage(s) proposed on the final plan.

4.2.7 Trip Generation Table

The Applicant shall prepare a Trip Generation Table, listing at a minimum, each type of land use within the site at build-out, the size and unit of measure for each land use, trip generation rates (total daily traffic, A.M. and P.M. peaks), and the resultant total trips generated.

4.2.8 Trip Distribution

The distribution of site generated traffic must be documented in the TIS. The procedures and rationale used in determining the trip distributions for proposed developments must be fully explained and documented. It is recommended the Applicant coordinate with the City to establish an acceptable distribution pattern.

4.2.9 Requirements for Additional Lanes

Within the study area of a TIS, as established by agreement between the City and the Applicant, additional lanes may be required on streets where minimum LOS are exceeded for existing cross sections based on post development conditions. If such additional lanes are required, as established as part of the TIS, they can include general purpose through lanes, left turn lanes and right turn lanes. Additional lanes, when determined by a TIS and in the opinion of the City Engineer of the need for such lanes is established, shall be provided by the Applicant. Such improvements must be designed and constructed to City and/or ALDOT standards. Generally, the cost of such improvements will be borne entirely by the Applicant.

During the design phase of providing additional lanes on public streets and roadways, if it is determined that additional right-of-way is required to construct such additional lanes, the Applicant shall provide additional right-of-way along their property frontage as directed by the City Engineer. If the construction of such additional lanes requires right-of-way beyond the property frontage of the Applicant, the Applicant shall work with the City to devise a method to provide the additional right-of-way and related roadway improvements or modify their development plan to remove the requirement for such additional lanes.

4.2.10 Intersection Delay

An A.M. and P.M. commuter peak hour intersection LOS analysis shall be conducted for each intersection analyzed in the TIS for existing conditions and those that reflect post development conditions. This analysis shall be based on procedures specified in the *Highway Capacity Manual*, latest edition. In those areas adjacent to or in close proximity to City schools or Auburn University, additional peak hour analyses shall be conducted for those afternoon hours which reflect the peaks for those facilities. The intent of this analysis is to establish the existing and post development intersection delays and related LOS for comparison and determination of impacts on operations.

4.2.11 Driveway Access

Site driveways shall be analyzed to determine the LOS for each access point. If a driveway capacity analysis demonstrates a LOS of a "D" or worse, the TIS shall address this issue by analyzing if a traffic signal is warranted or if an operational change is acceptable (such as a turn restriction), and whether it will interfere with the adjacent street traffic.

Driveway plan concepts for a development shall be submitted to the City for approval prior to development of construction plans. An access permit is required on those routes maintained by ALDOT. The City shall be copied on all ALDOT permit applications within the City and its planning jurisdiction. Because frequent curb cuts and driveways providing access to numerous adjoining properties are an impediment to the proper functioning of major streets, on-site circulation and cross-access agreements between lots are encouraged. Minimum spacing of driveways and other curb cuts shall conform to the minimum standards outlined in this Manual in Section 5.0 "Roadway Design".

4.2.12 Traffic Signals

Any traffic signals proposed for installation on City streets shall meet the minimum criteria as outlined in the MUTCD, latest edition. A signal warrant analysis for potential signal locations shall consist of a review of the applicable signal warrants contained in the MUTCD. On roadways controlled by ALDOT, procedures for meeting traffic signal warrants as established by the Department shall be followed.

Proposed and existing access points, proposed intersections, and existing intersections effected by the land use that have any potential for traffic signalization will be reviewed and discussed during the scoping meeting/telephone conference. During the scoping meeting/telephone conference, an outline of locations for signal warrant analysis will be agreed upon. Alternatives to signalization at potential signal locations will be discussed in the scoping meeting/telephone conference and the TIS report. The alternatives to adding new intersections would include added access points, limited movements at access points, frontage roads, joint use access points, roundabouts and other such designs as required and/or approved by the City.

If any signal timing and/or phasing changes are proposed as a mitigation measure of a TIS, an appropriate analysis of the intersection where the signal exists shall be conducted to demonstrate the potential implications of the suggested modifications. Such modifications to existing traffic signals shall require submittal of a request for such change with supportive documentation of analysis and findings and shall not be undertaken without approval from the City Engineer.

Sight distance concerns that are anticipated or observed which may impact driveway, intersection, or roadway operation and safety need to be discussed in the TIS. Recommendations regarding stopping sight distance, intersection sight distance, and passing sight distance needs should be provided by the Applicant's traffic engineer for detailing on the final development, site plan, or final construction plans. Intersection sight distance requirements for driveways and intersections shall meet the criteria as set forth in this Manual in Section 5.0 "Roadway Design".

4.2.13 Mitigation Thresholds and Measures

The City has determined that the daily and peak hour traffic volumes on all streets designated as a collector, local commercial, local residential or alley shall not have a LOS below a "C". Arterials shall not have a daily or peak hour LOS below a "D".

When the TIS indicates the roadway(s) within the study area exceed the minimum acceptable LOS standard, the TIS shall include feasible measures which would mitigate the project's impacts. Additionally, if the analysis included in a TIS establishes the LOS for an intersection, intersection approach or roadway dropping one (1) level, however, not below the minimum criteria for a specific roadway classification, mitigation will not be required. If for any reason, the TIS illustrates the reduction in LOS for an intersection, intersection approach or roadway dropping two (2) LOS, mitigation will be required.

An appropriate measure of traffic mitigation would be the ability of roadway, intersection and traffic control improvements to maintain acceptable LOS for the impacted facility. Mitigation measures include the addition of through lanes (roadway widening), left turn lanes, right turn lanes, improved traffic control, access management and other such measures as deemed appropriate by analysis and in accordance with the City.

A waiver may be submitted for relief from mitigation requirements upon approval from the City Engineer. Mitigation is not required on approaches where existing and future conditions require mitigation but the proposed development has little to no impact on said approach lane.

4.2.14 Traffic Signal Operations Improvements

Traffic signal improvements shall include upgrading signals to include additional signal phases and timing plans, signalization of an unsignalized intersection and/or implementation of a coordinated traffic system. Signal improvements and/or installations on City streets must be approved by the City Engineer. Traffic signals recommended to be installed on ALDOT roadways shall be jointly approved by ALDOT and the City. Generally, the cost of such improvements will be borne entirely by the Applicant.

4.2.15 Geometric Improvements

Mitigation measures, which include street widening, and other physical improvements must be demonstrated to be physically feasible and must meet minimum City standards for both on-site and off-site improvements. As part of the basic TIS analysis, a determination of the need for left and right turn lanes as a result of development generated traffic should be undertaken. The analysis techniques utilized shall include procedures and methods outlined in this Manual in Section 5.0 "Roadway Design" or other methodologies as approved by the City Engineer.

The needs for turn lanes and other auxiliary lanes shall be determined for each development access and study intersection included in the TIS. The basis of design for such devices shall be as outlined in this Manual in Section 5.0 "Roadway Design", AASHTO or ALDOT as applicable. All proposed project entrances onto arterial and collector streets shall be evaluated as to whether they require deceleration lanes as outlined in this Manual in Section

5.0 "Roadway Design".

4.2.16 Pedestrian/Bicycle Improvements

If high pedestrian and/or bicycle traffic is expected to be generated by a development, as determined by the City Engineer, the TIS must consider improvements and connectivity to existing and proposed facilities. The *Highway Capacity Manual* contains LOS criteria for various pedestrian and bicycle facilities. Similar to roadways and intersections, pedestrian and bicycle facilities shall not have a LOS below a "C". When a project's impacts are determined to exceed the minimum acceptable LOS standard, the TIS shall include feasible measures to improve pedestrian and bicycle safety within the study area.

4.3 TRAFFIC IMPACT STUDY REPORT CONCLUSIONS

The findings of the TIS should be provided in summary format, including the identification of any areas of significant impacts and recommended improvements/mitigation measures to achieve the maximum volume standards for all modes.

4.3.1 Geometric Improvements

The TIS shall include recommendations for all geometric improvements such as pavement markings, signs, adding through or turn lanes, adding project access and assorted turn lanes and changes in medians. Sufficient dimensions/data shall be identified to facilitate review. Anticipated right-of-way needs shall also be identified. This information shall be made available to the project civil engineer for use in preparing engineering plans.

4.3.2 Responsibility

The TIS shall describe the location, nature and extent of all transportation improvements required to achieve the required post development LOS within the study area. The responsibility for implementation of the post development mitigation measures shall rest with the Applicant.

4.4 TRAFFIC IMPACT STUDY REPORT OUTLINE

The following outline has been developed to serve as a guide for the organization of the Traffic Impact Study report.

- ☐ INTRODUCTION (Purpose of report and study objectives)

- ☐ PROPOSED DEVELOPMENT
  - ☐ Site Description (include small version of site plan in appendices)
  - ☐ Site Location (include site location map)
  - ☐ Zoning (Current and proposed)
  - ☐ Time Frame of Development (include any phasing of development which is anticipated)

- ☐ BACKGROUND INFORMATION
  - ☐ Background Traffic Growth Rate (include projected traffic growth rate for the development time frames included in the proposed development and include method for traffic growth projections)
  - ☐ Off-Site Developments (description of other significant development in the vicinity which could impact traffic conditions in the study area)
  - ☐ Planned and Programmed Roadway Improvements (description of any Planned or Programmed Roadway Improvements within the study area which could impact traffic conditions within the study area during the time frame for development of the proposed project)

- ☐ EXISTING TRAFFIC CONDITIONS
  - ☐ Traffic Count Data (introduce and illustrate current traffic counts for the study area roadways and intersections)
  - ☐ Existing Conditions Capacity Analysis (evaluate study area roadways and/or intersections based upon industry standard capacity analysis methods)
  - ☐ Summary of Existing Traffic Conditions in the study area

- ☐ FUTURE TRAFFIC CONDITIONS
  - ☐ Background Traffic Growth (apply the background growth rate for the time frame for a give phase of development)
  - ☐ Inclusion of Planned or Programmed Improvements (in the event any of the Planned or Programmed improvements are to be included in the analysis of future traffic conditions, a status of the projects and time frame of the projects should be demonstrated)
  - ☐ Trip Generation Estimates (estimate trip generation potential for each level of development)
  - ☐ Trip Distribution (describe the anticipated routes for traffic expected to be generated by the proposed development and illustrate the findings in graphic format)

- ☐ Traffic Assignment (assign traffic expected by the proposed development to the study area roadways based upon the distribution patterns established)
- ☐ Future Conditions Capacity Analysis (evaluate the study area roadways and intersections as well as site accesses with post-development traffic volumes)
- ☐ Identify Capacity Deficiencies (identify roadways and/or intersections in which capacity deficiencies are expected for future traffic conditions)
- ☐ Recommended Roadway and Traffic Control Improvements (develop and test potential improvements for the study area roadways and intersections aimed at mitigation of traffic impacts resulting from development traffic)
- ☐ Internal Circulation (demonstrate the ability of the site's internal circulation pattern to handle site generated traffic that includes trucks)
- ☐ Capacity Analysis with Recommended Improvements (demonstrate the effectiveness of Recommended Roadway and Traffic Control Improvements and resultant levels of service)

Note: These steps should be taken for each level of development within the corresponding time frame.

☐ SUMMARY AND CONCLUSIONS – Provide a summary of the findings of the study effort to include existing traffic conditions, future traffic conditions for each level of development, and the recommended improvements aimed at mitigating potential traffic impacts resulting from the proposed development for each level of development.

SECTION 5

5.0 ROADWAY DESIGN

5.1 INTRODUCTION

In the design of roadways, it is essential to account for all the components that may affect the efficiency and safety of the roadway network. The four (4) main elements are the vehicle/driver, the pedestrian, the bicyclist and the road. This section of the Manual is intended to address the roadway design elements necessary for the construction of streets within the City.

In cases where the City has adopted an improvements plan, the elements of the plan will supersede the requirements outlined in this section.

5.2 ROADWAY DESIGN ELEMENTS

Roadways shall be designed in accordance with the Manual, City Standard Drawings and Specifications, the American Association of State Highway and Transportation Officials (AASHTO) *A Policy on Geometric Design of Highway and Streets* (Green Book), the Federal Highway Administration (FHWA) *Manual on Uniform Traffic Control Devices* (MUTCD), the 2012 International Fire Code (IFC) and all other State and Federal applicable standards. The accepted standards used for design in the City are presented below.

5.2.1 Design Controls and Criteria

The design controls and criteria as established by the City are provided to optimize the design of streets within the City.

5.2.1.1 Street and Road Classifications

Street classifications for the City are currently reflected in the Major Street Plan, which defines existing and proposed arterial, collector, residential collector and local commercial streets. All other streets are classified as local streets. The listing of the City's streets, by classification, is included in Appendix K-M of this document; whereas, Appendix K "Arterial Road List", Appendix L "Collector and Residential Road List", and Appendix M "Local Commercial / Local Street / Cul-de-Sacs / Alleys List".

Streets in a subdivision shall be classified according to the Major Street Plan. Modifications of the City's roadway classification system will occur as the City develops in the future and land use conditions change. The City Engineer will approve any changes to the roadway classification listing and will require the listing outlined in Appendix K through M of this Manual as well as the Major Street Plan to be amended.

Streets within the City shall be limited to the maximum traffic volumes shown in Table 5.1 as being those levels beyond which additional traffic volume would unacceptably degrade the quality of life throughout the community. Table 5.1 is a compilation of roadway daily and peak hour volumes established for the City based on previous ordinances, experience of the City and the ALDOT accepted volumes for roadways.

TABLE 5.1
Maximum Roadway Volumes by Classification

Classification	Two-Lane		Three-Lane		Four-Lane		Four-Lane Divided (5-Lane)		Six Lane	
	Maximum Volumes									
	Peak Hour (vph)	Daily (vpd)	Peak Hour (vph)	Daily (vpd)	Peak Hour (vph)	Daily (vpd)	Peak Hour (vph)	Daily (vpd)	Peak Hour (vph)	Daily (vpd)
Arterial*	1,300	13,300	1,570	15,700	2,050	20,500	2,540	25,400	3,750	37,500
Collector*	1,030	10,300	1,290	12,900	1,620	16,200	1,770	17,700	2,600	26,000
Residential Collector**	500	5,000	630	6,300	790	7,900	860	8,600	N/A	N/A
Local Commercial*	1,030	10,300	1,290	12,900	1,620	16,200	1,770	17,700	N/A	N/A
Local Residential/ Cul-de-sac***	200	2,000	N/A	N/A	N/A	N/A	N/A	N/A	N/A	N/A
Alley***	30	300	N/A	N/A	N/A	N/A	N/A	N/A	N/A	N/A

* Developed by Skipper Consulting, Inc. and approved by the Alabama Department of Transportation
** Based on trip generation for 500 detached residential dwelling units from ITE
*** Based on maximum daily volumes from standards of other communities in Southeast

Daily and peak hour traffic volumes on all streets designated as a collector, residential collector, local commercial, local residential or alley shall not have a LOS below a "C". Arterials shall not have a daily or peak hour LOS below a "D". If in the opinion of the City Engineer, in those cases where property is proposed for redevelopment or rezoning and development generated would cause the traffic volume to exceed the limits outlined in Table 5.1, a TIS would be required to be conducted by the developer of the property. Requirements for TIS are outlined in this Manual in Section 4.0 "Traffic Impact Studies".

5.2.1.2 Design Vehicles

The largest design vehicle likely to frequent the roadway (or parking facility) shall be considered during design of critical features, such as radii at intersections and radii of turning roadways. Where a roadway is identified as a fire access road/lane, radii shall be designed to handle the largest fire apparatus with minimum difficulty. The school bus shall also be considered for the design of some subdivision street intersections. In some cases, larger radii may be required and will be noted during the DRT process.

TABLE 5.2
Roadway Design Vehicles

Classification	Design Vehicle
Arterial	WB-50
Collector	WB-40
Residential Collector	WB-40
Local Commercial	WB-40
Local Residential/Cul-de-Sac	S-BUS-35
Alley	SU

5.2.1.3 Design Speed

The following design speeds shall be used when determining horizontal and vertical alignment on City streets.

TABLE 5.3
Roadway Design Speeds

Classification	Design Speed
Arterial	50 mph
Collector	35 mph
Residential Collector	25 mph
Local Commercial	25 mph
Local Residential/Cul-de-Sac	25 mph
Alley	15 mph

5.2.2 Horizontal Alignment

The minimum radius of curvature of streets on the center line shall be as identified in the AASHTO Green Book, latest edition. The minimum radius will be based on the roadway design speed and applicable super elevation rates and side friction factors.

A clear line of sight is required across the inside of all horizontal curves. The stopping sight distance is measured along the centerline of the inside lane around the curve. The area bounded by the stopping sight distance and the sight line shall be clear of all sight obstructions, including walls, buildings, signs, and vegetation.

5.2.3 Vertical Alignment

The design of the vertical alignment involves the selection of suitable grades to provide minimum stopping sight distance and ensure adequate drainage.

5.2.3.1 Sight Distance

All changes in street grades shall be connected by vertical curves of a minimum length equivalent to that distance necessary to maintain a safe stopping sight distance in accordance with the current standards established by the AASHTO Green Book.

5.2.3.2 Vertical Grade

In general, streets shall be designed to conform to the topographical conditions of the site and to provide adequate surface drainage. The maximum grade for streets shall be identified in the AASHTO Green Book, latest edition. The maximum street grade from the center line intersection of two (2) streets shall be five (5%) percent for a minimum distance of 100 feet. Street grades shall be a minimum of one (1%) percent.

5.2.4 Typical Street Section

Minimum right-of-way widths, measured from property line to property line; and minimum street widths, measured from back-of-curb to back-of-curb; and sidewalks, shall be as follows:

TABLE 5.4
Street and Sidewalk Configurations

Classification	Sidewalk	B/C to B/C Width	Pavement Width	ROW Width
Arterial	Both sides	52’	48’	80’
Collector	Both sides	31’	27’	60’
	1 side*	35’	31’	60’
Residential Collector	Both sides	31’	27’	60’
Collector at Intersection	Both sides	40’	36’	60’
Local Commercial	1 side**	28’	24’	50’
Local Residential	Both sides	26’	22’	50’
	1 side	28’	24’	50’
Cul-de-sac	1 side**	26’	22’	50’
Alleys (One-way)	Not Required	Not Required	11’	25’
Alleys (Two-way)	Not Required	Not Required	20’	30’

*Permitted at option of City Engineer

**City Engineer shall determine location of sidewalk.

***Width may vary at fire hydrant.

5.2.4.1 Streets

All roadway pavements shall be constructed to meet the specifications of the City, and shall be approved by the City Engineer. All such roadways shall be surfaced for their entire width with curb and gutter at each edge, except as provided in this Manual; and shall be provided with all necessary catch basins and storm sewer collection system. Surface layer placement rates and thicknesses must be in accordance with the ALDOT Guidelines for Operation, latest edition.

Design and construction of improvements on roadways controlled by ALDOT shall be in accordance with applicable ALDOT requirements and permitted prior to construction.

All streets within a subdivision shall be provided with a paved roadway by the developer. The construction of streets to arterial standards shall be a shared responsibility of the developer and the City. The developer will only be responsible for construction of the standard local, residential collector or collector street. The City will be responsible for the additional construction needed for the roadway to meet arterial standards.

Street layouts shall be provided for the continuation and connection of streets between adjacent properties whenever such continuation and connection is necessary for the convenient movement and circulation of traffic, effective police and fire protection, access by public service vehicles, and efficient provision of utilities and consistent with the Major Street Plan. The engineer is encouraged to coordinate roadway layouts with the Fire Chief prior to the DRT submittal to ensure compliance with the IFC. The engineer is also encouraged to coordinate with the United States Postal Service on any requirements for a centralized mail system during the lot layout.

Existing streets that abut a subdivision shall be continued and the continuation shall be at least as wide as the existing streets unless a reduction in width is approved by the City Engineer, and in alignment with the existing street. Street layouts in subdivisions shall provide right-of-

way stub-outs paved to the property line for the future continuation into unsubdivided lands adjoining a sufficient number of streets to meet the purpose previously outlined. A paved, temporary turnaround shall be provided when required by the Environmental Services or Public Safety Departments to facilitate efficient maneuvering of equipment to serve the neighborhood. A note shall be included on the subdivision plat that land outside the normal right-of-way shall revert to the abutting properties whenever the street is continued and connected to the adjacent property. The turnaround may be configured as either a bulb with a minimum 44-ft radius, or a 24-foot wide T-shape with minimum "leg" lengths of 50 feet. The pavement build-up for temporary turnarounds shall match the associated roadway.

5.2.4.2 Non-Curb and Gutter

The requirements for curb may be waived for local streets if the gradient of the street does not exceed five (5%) percent, the street serves lots which have a minimum area of three (3) acres, and the traffic potential is less than one thousand five hundred (1,500) Average Daily Traffic (ADT). Where roadways are allowed to be constructed without curb and gutter, the following requirements must be met:

- The roadway pavement shall be a minimum of twenty-two (22) feet in width.
- Graded shoulders of at least six (6) feet width shall be provided on each side.
- All driveway turnouts shall be paved and sloped away from the roadway.
- A paved turnout shall be provided for access of mail trucks to mailboxes.
- If necessary, as determined by the City Engineer, additional right-of-way may be required.
- If considered appropriate, and approved by the City Engineer, a street consisting of a twenty (20) foot wide paved roadway with a two (2) foot valley curb on each side may be installed in lieu of the above items.

5.2.4.3 Sidewalks

This Manual shall govern the requirements for construction, improvement, and repair of sidewalks. Construction of compliant sidewalks shall be required when a property is either first developed or redeveloped. In cases of lesser scales of property development or redevelopment, the City Engineer shall require compliance commensurate with the amount of development.

All sidewalks constructed within the City right of way must comply with 'Public Rights-of-Way Accessibility Guidelines' (PROWAG) issued by the United States Access Board (Latest version, with 2/13/13 "shared use path" supplement).

Design Criteria

Sidewalks shall be a minimum of four (4) feet wide on local and cul-de-sac streets. Sidewalks shall be a minimum of five (5) feet wide on arterials, collectors, local commercial, and residential collectors. If the distance between the back of curb and the edge of sidewalk is less than two (2) feet, sidewalk must be a minimum of five (5) feet wide. The cross slope of the pedestrian access route shall be two (2) percent maximum, including driveway crossings.

In some areas the minimum sidewalk width is dictated by an adopted master plan, such as the

Downtown Sidewalk and Ped Light Plan, the Streetscape Plan, or a specific corridor plan. For development or redevelopment in these areas, existing sidewalks of insufficient width are required to be replaced with new sidewalk that is compliant with the associated master plan for that location.

Requirements for construction of new sidewalks at corners shall include the requirement to construct accessible curb ramps pursuant to City standards as part of the new sidewalk if:

- There are no existing curb ramps at the location;
- The existing curb ramps do not meet current City standards; or
- The existing curb ramps are in poor condition, as determined by the City.

Sidewalk Location

Sidewalks are to be located on both sides of arterials and residential collectors within the City. Sidewalk on local residential, local commercial and cul-de-sacs may be located on one (1) or both sides of the roadway. Any sidewalk on a cul-de-sac street may terminate at the beginning of the radius. Roadway classified as alleys do not require sidewalk construction. Where sidewalk is permitted on only one side of the roadway, the City Engineer shall designate which side of the roadway the sidewalk shall be constructed.

All developments that abut an existing arterial or collector facility without sidewalk infrastructure will be required to install sidewalk within the existing right-of-way as part of the development. Developments within the Downtown Sidewalks and Pedestrian Lighting boundary may be required to install a wider sidewalk within the existing right-of-way as part of the development as outlined on the map in Appendix P-3. The widths identified are minimum widths; however, in consultation with City staff, widths may be increased based on the density and intensity of the proposed development.

The street frontage requirements may also include street trees and decorative lighting. As part of the development review, requirements for street trees may be used to offset front bufferyard requirements. The engineer is encouraged to meet with City staff early in the development process to determine the parameters for streetscape improvements.

Subdivision developments that have road frontage on an arterial or collector facility will be required to install sidewalk within the existing right-of-way for the entire arterial or collector frontage where none exists. If the existing right-of-way is not of sufficient width to construct the sidewalk or other improvements additional right-of-way or easements must be provided. If a development abuts a collector that was designed and approved by the City with sidewalk on the opposite side of the roadway the development is exempt from this requirement. If a development abuts a collector without a continuous sidewalk on either side of the right-of-way and it is determined by the City Engineer that sidewalk will not be required on each side of the roadway, the location of the sidewalk will be determined by the City Engineer.

In some cases, as determined by the City Engineer, the developer may be required to provide payment for the sidewalk in lieu of constructing it with the development. See section 5.13 Streetscape Fund for additional information.

Sidewalk Installation

Sidewalks shall be installed in all new subdivisions prior to the expiration of bonding.

Sidewalk shall be installed abutting properties occupied by new residential or commercial construction along any street prior to completion of its construction and/or the issuance of a Certificate of Occupancy (CO). When sidewalk is installed along a development frontage, the sidewalk should terminate with a smooth transition with the adjacent grade or to the nearest driveway or roadway if within thirty (30') feet unless site conditions prohibit the connection. If additional grading is needed along the right of way, the plans should reflect the extent of the work.

Whenever a street is designated for reconstruction or a new section is being completed, installation of sidewalk will be considered where none exists and sidewalk repaired or replaced where the existing sidewalk is unsafe, defective or insufficient, and/or where sidewalk grades no longer match new street grades.

Inspections

New sidewalk installed within the right of way shall be inspected based on the following guidelines:

- Running slope: Shall not exceed the general grade established for the adjacent street or highway
- Measuring device: Two (2) foot Smarttool digital level or approved equal
- Cross slope: Two (2) percent maximum, checked at ten (10) foot intervals along the centerline of the path of travel.

Exceptions

The City Engineer may determine that sidewalk is not required when any one (1) or more of the following conditions apply:

- There is insufficient right-of-way;
- The installation encourages pedestrian traffic in an otherwise dangerous area;
- The installation abuts industrial zoned lands, unless situated between other pedestrian generating areas; or
- There is engineering justification determining that sidewalks are not required based on special circumstances.

Right-of-Way Trees

Trees located within the right-of-way either causing upheaval of sidewalk sections or otherwise compromised by sidewalk installation, repair or replacement shall be evaluated by the City Arborist who shall make a recommendation as to the health and life expectancy of said trees. Trees within the right-of-way that are determined to be unhealthy and/or near term shall be removed by the City, at no expense to the property owner.

New trees installed within the right of way as part of a development shall be installed per the City's detail, including a tree well, grate, and brick color to match the Toomer's Corner color

Pine Hall Brick English Edge Full Range, or approved equal. Tree wells and grates may be waived at the discretion of the City Engineer for roadway sections without existing or proposed sidewalks. Tree locations and species shall be coordinated with City staff during the DRT process.

Silva Cells will be required as part of the tree installation along College Street from Glenn Avenue to Magnolia Avenue and along Magnolia Avenue from Wright Street to Gay Street, and at other locations as needed to meet the soil volume requirements.

In some cases, as determined by the City Engineer, the developer may be required to provide payment for required trees and tree wells in lieu of installing them with the development. See section 5.13 Streetscape Fund for additional information.

Requests for Sidewalks

Requests for sidewalk construction may be submitted online at https://www.auburnal.gov/engineering-services/request/.

A request for sidewalk construction may originate with an individual, a neighborhood association or the City Council. Petitions from multiple individuals are encouraged to show neighborhood support but are not required. Requests from citizens should be submitted to the Engineering Services Department. The request should specify the street(s) on which sidewalk construction is requested and state the reason(s) for requesting sidewalk construction. Any existing roadway conditions which support sidewalk installation should be noted, including, but not limited to, the following:

- Provide access for walking to schools;
- Provide access to pedestrian destinations, such as transit stops, parks, places of worship, places of work and commercial areas;
- Provide access for the disabled;
- Connect to an existing network of sidewalks;
- Show evidence of a worn path; and/or
- History of vehicular/pedestrian crashes.

The Engineering Services Department will evaluate each request to determine if it should be recommended to City Council for budget consideration. If the Engineering Services Department determines that a sidewalk may be warranted, the engineering staff will evaluate the feasibility of construction, considering factors such as:

- Available right-of-way or easement for installation;
- Terrain;
- Existing obstructions, utility poles, landscaping, etc.;
- Existing trees and the impact on trees;
- Drainage conditions; and/or

- Cost estimates.

The results of the evaluation will be available to the public.

If the engineering evaluation concludes that construction of the requested sidewalk is feasible, it is added to the list of proposed construction projects and forwarded to the City Council for inclusion in its budget hearing to be considered for funding. Any resident may attend the budget hearing and provide input. If the project is funded, the Engineering Services Department will schedule construction.

5.2.4.4 Irrigation

All irrigation installed within right of way shall be in accordance with the Irrigation Policy in Appendix P-1.

5.2.5 Clear Zone

The AASHTO *Roadside Design Guide* shall be used to determine clear zone widths for all streets within the City. Most curbs do not have the capability to redirect vehicles, therefore minimum clear zone distances should be provided where practical. The AASHTO *Roadside Design Guide* and the Green Book require a minimum offset distance be provided beyond the face of curb, with wider offsets provided where practical.

5.2.6 Driveways

A proposed driveway shall not connect to a public street or road, without first receiving approval of the location and cross-section specifications from the City, as applicable. When a driveway is proposed to tie to a state route within the City of Auburn, the developer must receive approval from the City prior to submitting plans to ALDOT. Any modifications to the driveway location or configuration during the ALDOT permitting process should be reviewed with the City to ensure compliance with these regulations. A proposed driveway shall not connect to a private road unless approved by the City and by the parties with an ownership interest in the private road. A representative of the City shall inspect the driveway(s) as constructed for conformance with the standards of this Manual and any approval granted under it, prior to issuing a certificate of occupancy.

5.2.6.1 Design Criteria

Driveway turnouts shall be a minimum of ten (10) feet wide and a maximum of fifty (50) feet wide, measured at the right-of-way. In cases where the radius on either side of the driveway causes the fifty (50) foot requirement to be exceeded at the right of way, the width will be determined at the tangent of the throat. A drawing will be required to illustrate the width. The fifty (50) foot wide driveway is reserved for commercial and multi-unit residential developments. For all other residential uses, the maximum width of an individual driveway turnout shall be twenty-four (24) feet. All driveway curb cuts shall be constructed in accordance with standards approved by the City Engineer and ALDOT where applicable. Driveway turnouts shall meet the City standard or be designed to meet specific site conditions. If a driveway turnout varies from the standard, appropriate design data should be included with the DRT submittal. The City Engineer may require wider driveway radii to avoid lane

encroachment by entering or exiting vehicles where narrow street widths exist.

Driveway width and return radius or flare shall be adequate to serve the volume of traffic and provide for efficient movement of vehicles onto and off the roadway. However, the width of driveways shall not be so excessive as to pose safety hazards for pedestrians and bicycles. In areas where significant pedestrian and/or bicycle travel is expected, as determined by either the City or the ALDOT, the ingress and egress lanes should be separated by a four (4) foot to ten (10) foot wide median with a pedestrian refuge area.

Driveways with more than two (2) lanes should incorporate channelization features, appropriately marked to accommodate ingress and egress traffic.

There should be one hundred twenty-five (125) feet of stacking for entering and exiting vehicles at the intersection of an arterial roadway measured from the pavement edge where practical. On collector roadways, the minimum vehicle stack distance shall be seventy-five (75) feet for entering and exiting vehicles measured from the pavement edge where practical. Vehicle stacking distances are illustrated in Figure 5.1a.

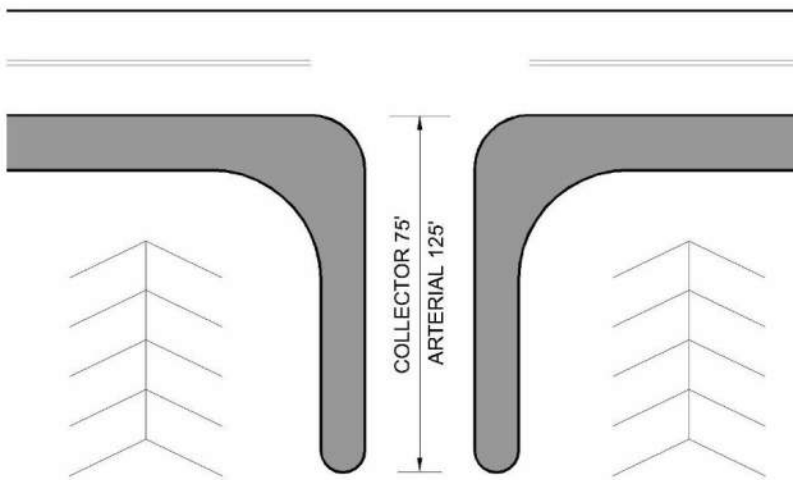

FIGURE 5.1a
Driveway Stack Length

5.2.6.2 Driveway Location

Corner and double frontage lots in residential development shall take access from the minor streets unless otherwise approved by the City Engineer. Approved access points shall be clearly noted on the Final Plat.

Construction of driveways along acceleration or deceleration lanes, left turn storage lanes, and tapers should be avoided, unless no other reasonable access to the property is available. If no other reasonable access can be provided, then the use of right-in/right-out accesses will be considered by the City Engineer.

Driveways shall not be permitted for parking or loading areas that require backing maneuvers in a public street right-of-way or onto a public or private service drive. Such restrictions will be

applicable for roadways classified as collectors and arterials in the City.

Direct access for single family residential lots or parcels shall be strongly discouraged on arterial roadways in the City.

Upon approval of a new means of access, a closed driveway shall be graded and landscaped to conform to adjacent land and any curb cut shall be filled in with curb and gutter per the City standards.

When a property is proposed for development or redevelopment, existing driveways that do not comply with the requirements of this Manual may be utilized under the following provisions:

a. The driveway(s) must have been in use for similar purpose within the past three years.
b. No significant accidents have occurred that could be attributed to the driveway(s).

Driveways that have not been utilized in the past three years or where the use is significantly more intense based on trip generations may be required to conform to the current standards. Consideration may be given to allowing the driveways if there are no present or future congestion or other safety concerns with the existing driveways.

5.2.6.3 Driveway Spacing

The minimum spacing between un-signalized driveways shall be as outlined in Table 5.5. The minimum spacing shall be measured as illustrated in Figure 5.1b.

TABLE 5.5
Driveway Spacing Standards

Classification	Posted Speed Limit (mph)					
	55	50	45	40	35	< 30
	Minimum Driveway Spacing (ft)					
Arterial	500	450	400	350	300	300
Collector	350	300	250	200	150	150
Residential Collector	-	-	-	-	125’ Average	

Note: Classifications not listed above are not subject to curb cut restrictions.

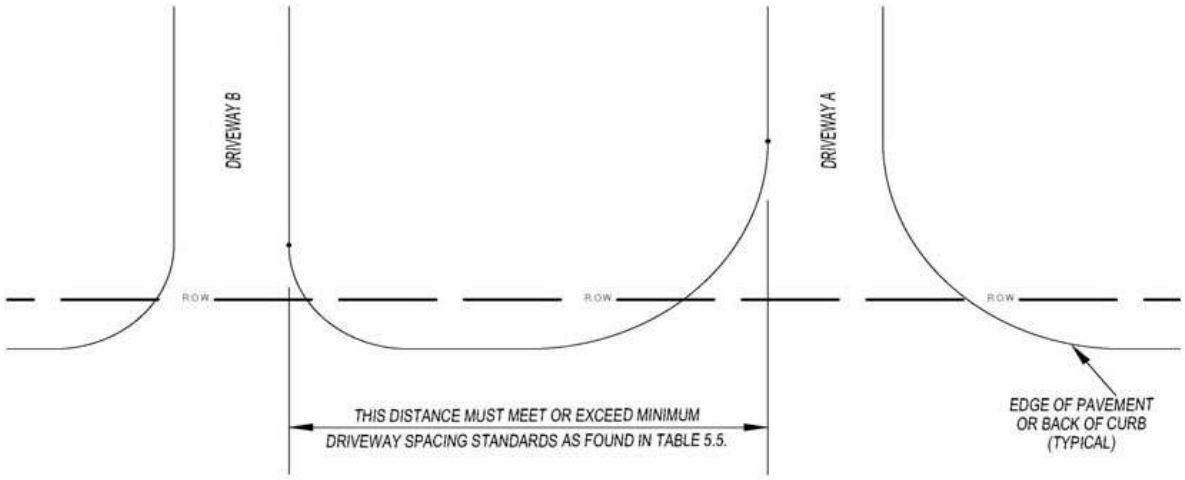

FIGURE 5.1b
Driveway Spacing Illustration

In areas where single-family detached homes abut residential collector streets, an average distance of one hundred twenty-five (125) feet shall be allowed between curb cuts. To compute the number of driveways allowed on residential collectors, divide the length of the residential collector intersecting segments by one hundred twenty-five (125). This figure rounded down to the nearest whole number will be the number of driveways permitted to take access on the residential collector. Corner and double frontage lots that abut a residential collector and local street will be required to take access from the local street.

In the case of expansion, alteration, or redesign of an existing development where the Applicant can demonstrate that pre-existing conditions prohibit adherence to the minimum driveway spacing standards, the City shall have the authority to modify the driveway spacing requirements or grant approval of a temporary driveway until such time that minimum spacing requirements can be met or an alternative driveway meeting the requirements of Table 5.5 is approved. Such modifications shall be of the minimum amount necessary.

Driveways shall be separated from their edge to the corner property lines of an intersecting street a distance equal to the minimum access spacing criteria as outlined in Table 5.6. Driveway spacing from intersections shall be measured along the right-of-way from the edge of the driveway to the right-of-way of the intersecting street.

TABLE 5.6
Curb Cut Distance from Street Corner Property Lines

Development Type	Street Type (All districts except Urban Core)					Urban Core District
	Arterial	Collector	Residential Collector	Local Commercial	Local Residential	
Non-Residential	125’	100’	100’	100’	100’	25’
Multiple Unit Development	125’	100’	100’	100’	100’	25’
All Other Residential	125’	100’	100’	25’	25’	25’
Shug Jordan/EUD				300’		
Auburn Outer Loop				300’		

No part of a driveway shall be located closer than a distance equal to the flare radius of the driveway from a lot line unless it is a common or shared driveway and/or approval is granted by the City Engineer and/or adjacent property owners as necessary.

5.2.6.4 Driveway Alignment

Driveways shall be perpendicular to the existing public street or approved private road and are required to align with existing or planned driveways on the opposite side of the road, wherever frontage is not separated by a median. Offset or skewed driveways create the potential for conflicting left turns or jog maneuvers, resulting in safety or operational problems, and may only be used if a professional engineer demonstrates a perpendicular and/or aligned driveway to be unsafe.

5.2.6.5 Shared Driveways

Common/shared driveways are encouraged to reduce impervious surface and the number of conflict points and should be used where practical. All shared driveways must be constructed in accordance with standards approved by the City Engineer, and described herein. In cases where single access driveways are restricted by the spacing requirements outlined in this Manual, a shared driveway may be the only design allowed.

The shared driveway shall be constructed along the common property line between the two (2) properties unless a written easement is provided which allows traffic to travel across one (1) parcel to access another parcel and/or access the public street. Shared driveways, cross access driveways, connected parking lots, and service drives shall be recorded as an access easement and shall constitute a covenant running with the land. Operating and maintenance agreements for these facilities should be recorded with the deed. Shared driveways utilized for single family residential lots shall not exceed twenty-eight (28) feet in width.

Where a proposed parking lot is adjacent to an existing parking lot of a similar use, there shall be a vehicular connection between the two (2) parking lots where physically feasible, as determined by the City and/or ALDOT. For developments adjacent to vacant properties, the site shall be designed and constructed to provide for a future connection.

5.2.7 Bicycle and Pedestrian Facilities

All bicycle and pedestrian facilities constructed within the City shall be constructed under the guidance of the AASHTO *Guide for the Development of Bicycle Facilities* and the MUTCD.

Bicycle parking is required in accordance with the Zoning Ordinance.

The following types of facilities shall be considered for construction within the City.

5.2.7.1 Shared Use Paths

A shared use path is a facility used by pedestrians, bicyclists and other non-motorized users and is detached or separate from the roadway. A shared use path may be within public right-of-way or within an independent right-of-way (i.e. homeowner's association).

The minimum width of a two-way shared use path is eight (8) feet, however ten (10) feet is

recommended. The minimum width of a one-way shared use path is six (6) feet, and requires signing and pavement markings to ensure proper use as a one-way facility. A ten (10) foot minimum vertical clearance is required.

Additional guidance for design speed, horizontal alignment, vertical grades and sight distance can be obtained from the AASHTO *Guide for the Development of Bicycle Facilities*.

Unpaved shared use paths are generally referred to as trails. To the extent possible, trails shall provide for pedestrian, bicycle and/or other non-motorized uses. Trails shall be planned, designed and constructed to avoid or minimize degradation of natural resources. Trails shall be soft-surface (crushed aggregate, clay or stabilized earth) except where necessary to prevent erosion and/or resource damage.

Shared use paths may be constructed of pervious concrete and other porous materials provided the runoff through the material will not be directed towards the subgrade of the traveled lane portion of the roadway.

The City may consider the installation of an alternating sidewalk/shared use path system in lieu of sidewalks. Such system must incorporate well-connected sidewalks and paths/trails that link each residential lot with on-site open space, recreational facilities and other amenities within the development site. A sidewalk/shared use plan for the entire development must be submitted to the City Engineer for approval. The plan shall include a map depicting the proposed location of all sidewalks and paths/trails through the development site.

5.2.7.2 Bicycle Lanes

A bicycle lane is a portion of the roadway, designated by signing and/or pavement markings for exclusive use by bicyclists. Bicycle lanes are typically one-way in the same direction as the adjacent vehicular traffic. The MUTCD contains signing and striping requirements for use in designating a bicycle lane.

The AASHTO Guide for the Development of Bicycle Facilities, Fourth Edition, contains guidelines for the minimum width of bike lanes.

To ensure bicyclists' safety, drainage grates must be bicycle-safe and manhole covers shall be at grade. Bicycle lane widths may need to be adjusted to avoid potential safety hazards.

5.2.7.3 Shared Roadway

Roadways without alternate bicycle facilities may be signed as a "Shared Roadway" to alert drivers that the roadway is utilized by both motor vehicle and bicycle traffic. Bicyclists may be accommodated through the use of the through travel lane, a wider travel lane [fourteen (14)+ feet] or paved shoulders. Signs and pavement markings such as "Sharrows" may be used to alert motorists of the shared use. The AASHTO Guide for the Development of Bicycle Facilities, Fourth Edition, contains guidelines for shared roadways. Most roadways are shared routes even when not signed or marked.

5.2.8 Cul-De-Sacs

Cul-de-sacs shall be permitted where topographic features or configuration of property boundaries prevent street connections.

A cul-de-sac street shall have a maximum length of seven hundred (700) feet, measured from the center line of the street from which the cul-de-sac takes access to the center of the turnaround at the end of the cul-de-sac. A maximum length of one thousand (1,000) feet shall be allowed where there are no more than twenty (20) lots and the net density does not exceed two (2) lots per acre. All cul-de-sac streets shall be provided at the closed end with a turnaround with a minimum right-of-way radius of fifty-five (55) feet, and a minimum roadway radius of forty-four (44) feet, measured at the edge of pavement. When a fire hydrant is located on a fire apparatus access road, the minimum road width shall be 26 feet, exclusive of shoulders, for at least 40' at the hydrant.

A planter island may be incorporated in the center of the terminus of a cul-de-sac. The planter island shall have a radius of twenty (20) feet and shall be reinforced with a mountable rolled curb.

5.2.9 Frontage Road/Service Drive

In cases where a frontage road exists, property access should be provided via such frontage road, rather than by direct connection to the abutting arterial or collector street. Rear service drives shall be encouraged, especially for locations where connection to a side street is available. In addition to access along the rear service drive, direct connection(s) to the arterial or collector street may be allowed, provided that the driveways meet the requirements.

In areas where frontage roads or rear service drives are recommended, but adjacent properties have not yet been developed, the site shall be designed to accommodate a future road/facility designed according to the standards of the City and/or ALDOT. The City and/or ALDOT may approve temporary access points where a continuous service drive is not yet available and a Performance Bond or escrow is accepted to assure elimination of temporary access when the service road is constructed.

Frontage road and service drive intersections at collector or arterial streets shall be designed according to the same minimum standards as described for driveways in Table 5.5 and Table 5.6.

The service drive is intended to be used exclusively for circulation, not as a parking, loading, or unloading aisle. Parking shall be prohibited along two-way frontage roads and service drives. One-way or two-way service drives designed with additional width for parallel parking may be allowed if it can be demonstrated through traffic studies that on-street parking will not significantly affect the capacity, safety, or operation of the frontage road or service drive. Perpendicular or angle parking along either side of a designated frontage road or service drive is prohibited.

5.2.10 Median Openings

The type, location, and length of medians on roadways shall be determined by the City and/or ALDOT, depending on the jurisdiction. This determination will be based on existing and projected traffic conditions; the type, size, and extent of existing and projected development and traffic generated by development; traffic control needs; and other factors. Median openings on South College Street and West Glenn Avenue are subject to approval by the City Council.

Median openings intended to serve development must be justified by a traffic impact analysis approved by the City and/or ALDOT. The cost for preparation of the traffic impact analysis and construction of the median opening or openings, including installation and operation of signals and other improvements where warranted, shall be borne by the Applicant.

5.3 INTERSECTION DESIGN ELEMENTS

Intersections vary in complexity from a simple 4-leg intersection to a more complex intersection at which three (3) or more roads cross within the same area. Various elements and distractions at an intersection may prohibit a driver from safely and efficiently moving through the area. The following guidelines and standards have been established to minimize the severity of potential conflicts between vehicles, pedestrians and bicyclists, while maintaining the smooth flow of traffic across the intersection.

Street jogs with centerline offsets of less than one hundred twenty-five (125) feet shall not be permitted.

5.3.1 Angle of Intersection

Street intersections shall be at right angles, or as close to ninety (90°) degrees as possible. Where, for topographic or other reasons acceptable to the City Engineer, an intersection cannot be at right angles, such intersection shall be so designed to ensure safety, shall be as close to right angles as possible, and in no case shall be less than sixty (60°) degrees. Intersections at angles less than sixty (60°) degrees are not permitted.

5.3.2 Development Entrances

In order to ensure smooth traffic circulation on the site, directional signs and pavement markings shall be installed as outlined in the MUTCD, latest edition, in conjunction with the City and/or ALDOT.

5.3.2.1 Signs

No signs shall be placed within the right-of-way. All signs shall be installed in accordance with the Zoning Ordinance. The Planning Department shall review the application, plans and specifications to determine whether the proposed sign conforms to all applicable requirements. The Inspection Services Department must pre-approve structural drawings for all freestanding signs prior to issuance of a Sign Permit by the Planning Department. Freestanding signs will also require a footing inspection by the Inspection Services Department.

Section 5.7 “Signing and Pavement Markings” contains additional information on street name signs and regulatory signs at development intersections.

5.3.2.2 Landscaping

All landscaping shall be installed in accordance with the Zoning Ordinance and the requirements of this Manual and the WRM Manual.

5.3.2.3 Islands

Development entrance islands are to be constructed in a manner as to not protrude into the right-of-way. A set back of ten (10) feet from the right-of-way is desired. Islands should not be installed to contain existing infrastructure, i.e. power poles, signal poles.

An island width of four (4) feet to ten (10) feet is recommended, which should provide adequate

refuge area for pedestrian and bicyclists. Median widths in excess of twenty (20) feet may encourage wrong way traffic entering or exiting the development and increase the overall width of the intersection, which negatively impacts safety.

A mountable nose with a roll curb is required on all development entrance islands. A detail is provided in the standard drawings in Appendix O of this document.

All landscaping within development entrance islands shall be installed in accordance with the Zoning Ordinance. Irrigation equipment is prohibited from the right-of-way except as provided for in the irrigation policy. Landscaping irrigation systems shall be installed with under drains to limit the impact on the adjacent street drainage system.

5.3.2.4 Irrigation

All irrigation installed within right of way shall be in accordance with the Irrigation Policy in Appendix P-1.

5.3.2.5 Gates

Gates are permitted on private development entrances; however, the location and type must be approved by the Fire Chief prior to installation and meet the requirements of the International Fire Code, latest edition, adopted by the City of Auburn City Council. The gate(s) location and relevant operational material must be provided during the DRT process.

5.3.3 Sight Distance

To provide a clear view of intersection streets to the motorist, there shall be a triangular area of clear vision formed by two (2) intersecting streets. The sight triangle for intersecting streets shall be as identified in the AASHTO Green Book, latest edition. The size of this sight triangle is a function of maneuver, traffic control, speed and design vehicle.

Figure 5.2 “Intersection Sight Triangles” illustrates the sight triangles required for a stopped vehicle on a minor road to turn left, turn right or cross the intersection. The sight triangle for viewing traffic approaching from the left is required for all three (3) movements; the sight triangle for viewing traffic approaching from the right is required for left turn and crossing movements.

The length of the sight triangle along the minor road (distance A in Figure 5.2) is the sum of the distance from the major street plus one half (0.5) lane width for vehicles approaching from the left, or one and one half (1.5) lane width for vehicles approaching from the right. A distance of fourteen and one half (14.5) feet from the major road is recommended, as it represents the position of the driver on the minor road. The distance A for vehicles approaching from the left should be fourteen and one half (14.5) feet plus one half (0.5) lane width, regardless of the number of lanes. For vehicles approaching from the right on multilane roadways, the distance A should be measured to the center of the inside travel lane.

The length of the sight triangle on the major road (distance B & C in Figure 5.2) is provided in Table 5.7 “Design Intersection Sight Distance”. These distances are based on the sight distance required for a stopped passenger car to either turn left, turn right or cross a two-lane highway with no median with a grade of three (3%) percent or less on the minor approach. If there are any

variations to this condition, the time gap will be modified and the required sight distance must be recalculated as per AASHTO. For streets with a posted speed limit of 35 mph or greater, the design speed used to determine the required intersection sight distance should be based upon the prevailing posted speed plus ten (10) miles per hour or the 85th percentile speed. The sight distance triangle shall also apply to development entrances and driveways.

FIGURE 5.2
Intersection Sight Triangles

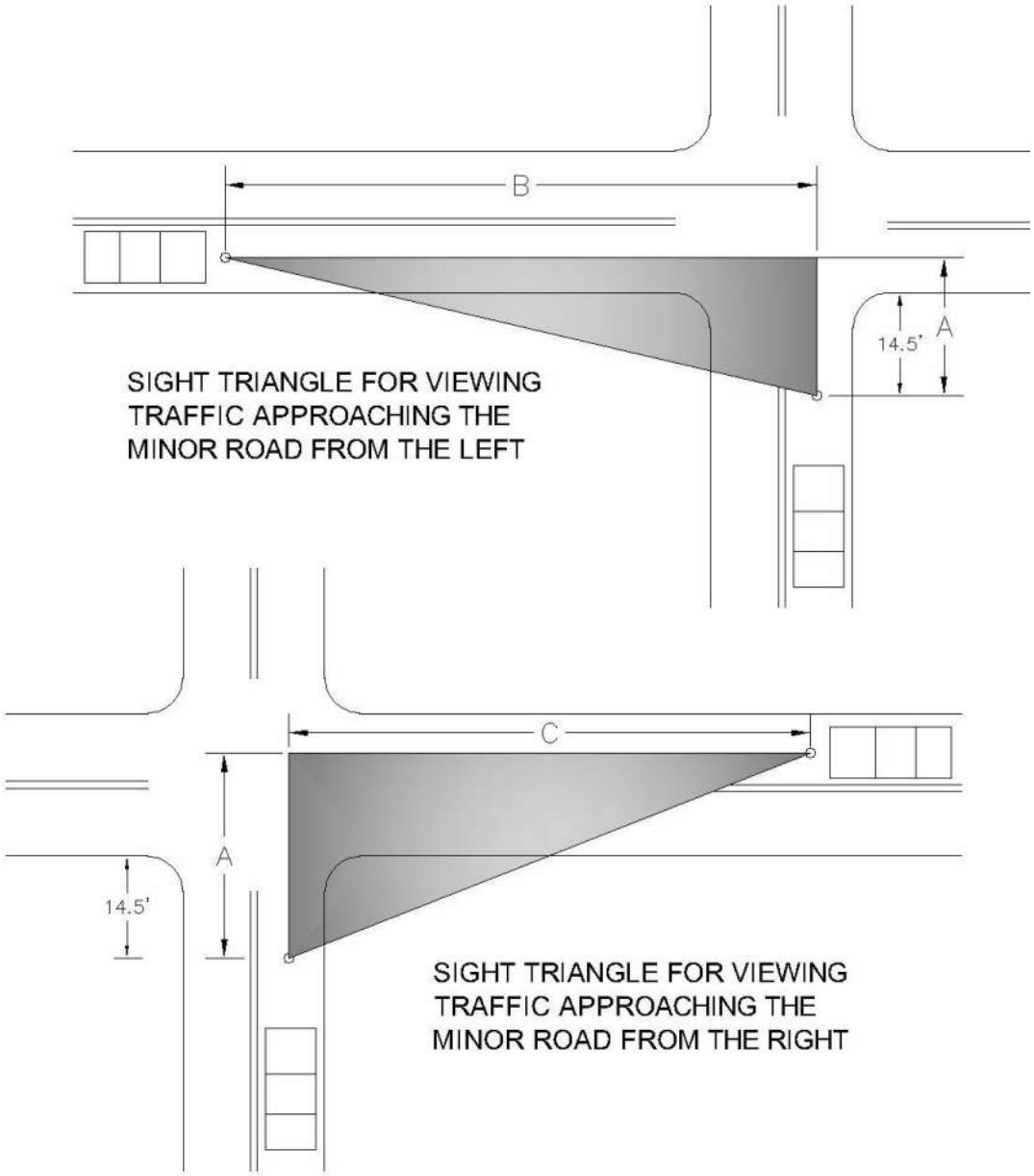

TABLE 5.7
Design Intersection Sight Distance

Design Speed(mph)	Design Intersection Sight Distance (ft)	
	Left Turn from Stop (C)	Right Turn from Stop/ Crossing Maneuver (B)
15	170	145
20	225	195
25	280	240
30	335	290
35	390	335
40	445	385
45	500	430
50	555	480
55	610	530
60	665	575
65	720	625
70	775	670

Source: AASHTO Geometric Design of Highways and Streets, 2004

Where there are unusual and/or specific circumstances relating to a street intersection such that the application of Table 5.7 may not be appropriate, the intersection shall be referred to the City Engineer who shall recommend a triangular area of clear vision using the standards contained in the AASHTO Green Book, latest edition.

At signalized intersections or at intersections with all-way stop control, the first stopped vehicle on one approach should be visible to the stopped drivers at each of the other approaches.

5.3.4 Roundabouts

Roundabouts shall be designed in accordance with the latest guidelines from FHWA. The following table describes the basic design elements by roundabout categories that are acceptable for use within the City. In some cases, larger radii and roadway turning widths may be required and will be noted during the DRT process.

TABLE 5.8
Roundabout Design Elements

Category	Recommended Maximum Entry Design Speed	Typical Inscribed Circle Diameter*	Typical Design Vehicle
Urban Compact	15 mph	80 – 100 ft	Single-unit truck/Bus
Urban Single-Lane	20 mph	100 – 130 ft	WB-50 (42.5’ trailer)
Urban Double-Lane	25 mph	150 – 180 ft	WB-50 (42.5’ trailer)

*Assumes 90º angles between entries and no more than four legs.

Source: FHWA Publication No. FHWA-RD-00-067 *Roundabouts: An Informational Guide*, 2000

5.3.4.1 Geometric Characteristics

The inscribed circle diameter is the distance across the roundabout, from outside edge of pavement to outside edge of pavement. The diameter must be wide enough to accommodate

the design vehicle while maintaining adequate curvature to deflect a passenger car and ensure a safe traveling speed. In general, the inscribed circle diameter of one hundred (100) feet is the minimum to accommodate a WB-50 design vehicle. Smaller roundabouts can be used on some local and collector streets where the design vehicle may only be a single-unit truck or a bus.

Entry and exit curves are dependent on the maximum design speed. The objective is to create speed consistency to reduce the crash severity and simplify the task of merging. Exit curve usually have larger radii than entry curves to minimize congestion at the exits.

5.3.4.2 Sight Triangle

The site triangle for a roundabout should be assumed to follow the curvature of the roadway, and should be measured as distances along the vehicular path of the conflicting approaches. The sight distance "triangle" has two (2) conflicting approaches that must be checked independently. The entering stream is comprised of vehicles from the immediate upstream entry. The circulating stream is comprised of vehicles that entered the roundabout prior to the immediate upstream entry. Values from Table 5.7, "Right Turn from Stop", should be used for the entering and circulating stream distances. It is recommended to provide no more than the minimum required intersection sight distance on each approach.

5.3.4.3 Landscaping

A standard roundabout may contain drought tolerant landscaping or hardscape. A tree may be positioned in the center as necessary for visibility concerns. Vegetation will be installed as designated by the City Arborist. A water spigot may be included as standard landscaping for maintenance of vegetation. Any necessary property dedication or landscape maintenance agreement shall be completed prior to final project design.

5.3.5 Left and Right Turn Lanes

The construction of left and right turns may be required to mitigate congestion and maintain the capacity of existing roadways.

5.3.5.1 Turn Lane Warrant Criteria

For new developments, redevelopments, or an increase in use intensity, turn lanes shall be required at permitted access points in accordance with Table 5.10 "Turn Lane Warrant Criteria". Deceleration lane and taper lengths for both right and left turn lanes shall be constructed in accordance with Table 5.11 and Figure 5.9.

Table 5.10
Turn Lane Criteria

Arterials & Collectors >= 40mph OR Arterials & Collectors < 40mph with 4 Lanes
Turn Lanes required
Arterials & Collectors < 40mph AND < 4 Lanes
Required if any of the following criteria are met: • The existing V/C Ratio of the roadway exceeds 0.70 of the Maximum Roadway Volumes by Classification, Table 5.1 • Collisions along the roadway within the last five years indicate a safety concern related to turning movements or access • The development is anticipated to generate significant truck traffic volume (>3% of total trips)
All Roadways
Required if any of the following criteria are met: • The development/redevelopment meets the thresholds for a TIS identified in Table 4.1 • Turn lanes are warranted based on NCHRP Report 457 *Intersection Channelization Design Guide* • The City Engineer requires under special circumstances related to safety or public welfare

Exceptions:

Developments/Redevelopments which generate less than forty (40) vehicular trips per day per the ITE Trip Generation Manual, will not be required to install turn lanes.

Developments/Redevelopments along selected downtown roadways will not be required to install right turn lanes. In these areas, left turn lanes or other approved mitigation measures will be required on a case-by-case basis. Refer to the map in Appendix P-5.

For arterials and collectors with a posted speed limit of 40mph or greater, turn lanes are required. Additionally, turn lanes are required for any arterial or collector roadway having two travel lanes in the same direction.

For arterials and collectors with a posted speed limit of less than 40mph, turn lanes are required when the existing V/C (Volume/Capacity) of the roadway exceeds 0.70. For purposes of this calculation, Table 5.1 "Maximum Roadway Volumes by Classification" should be used, along with the current ADT.

The map in Appendix P-5 provides a visual representation of the streets associated with the overall turn-lane warrant categories, as well as the downtown exclusion areas.

5.3.5.2 Turn Lane Design Standards

Left and right turn lanes should be designed using the minimum taper, deceleration, and storage lengths indicated in Table 5.11 and Figure 5.9.

TABLE 5.11
Deceleration Lane Standards

Posted Speed (mph)	Taper Length d_1 (ft)	Deceleration Length d_2 (ft)	Storage Length* d_3 (ft)	Minimum Total Length (ft)
25	75	35	25	135
30	95	65	25	185
35	110	100	25	235
40	130	140	25	295
45	150	195	25	370
50	165	255	25	445
55	185	320	25	530
60	205	395	25	625
65	225	480	25	730

* Storage Length determined by Traffic Impact Study – Minimum 25 ft.

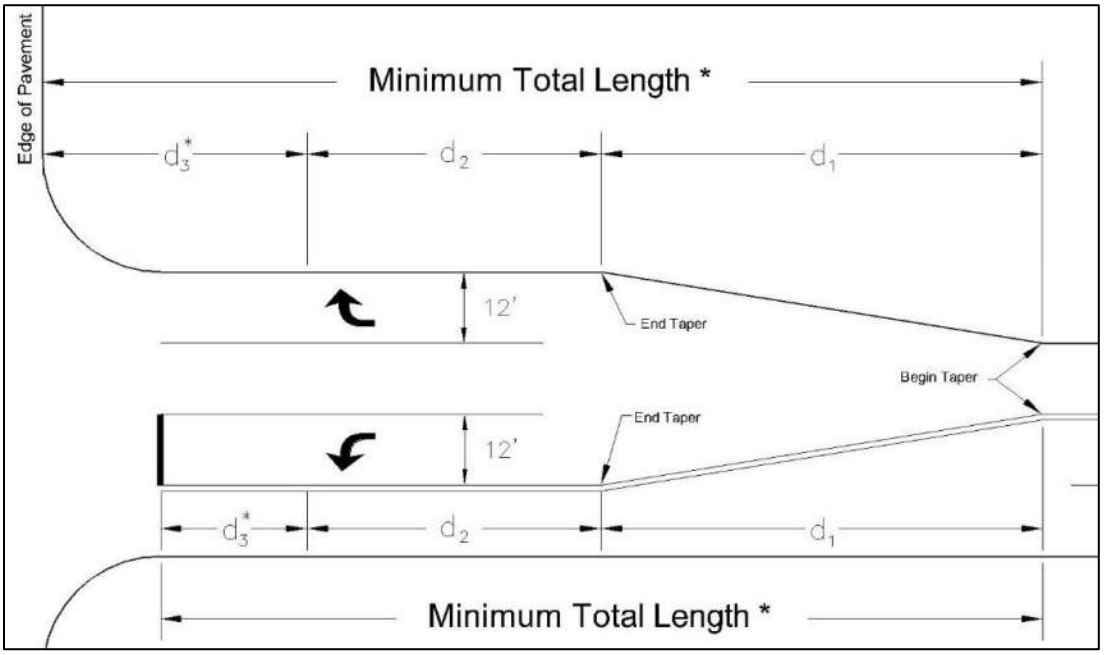

FIGURE 5.9
Deceleration Lane Standards

When the addition of turn lanes creates a through-lane shift, the transition must meet the minimum taper lengths recommended by AASHTO in the latest version of "A Policy on Geometric Design of Highways and Streets". The shift-taper length shall not be inclusive of the turn lane taper length.

A continuous right-turn lane may be required where driveway spacing requirements restrict the use of consecutive turn bays and tapers and where it is determined by the City and/or ALDOT that the lane would not be used as a through lane.

When a development warrants the widening of the roadway that will alter the current

pavement markings, the developer, at his or her expense, shall provide a one (1.0) inch overlay. The limits of the overlay shall cover all travel lanes and will begin and end at the limits of the roadway improvements.

5.3.5.3 Left Turn Lanes on Divided Roadways

On roadways where medians currently exist, the construction of a median opening at a private access point will require approval of the City Engineer prior to construction. Where medians are part of an access management plan that was approved by the City Council, modification of the median will require subsequent City Council approval. Construction of a left turn lane at a new median opening shall be done so in accordance with Table 5.10 and Figure 5.9.

Left turn lanes, if not present on divided roadways at current median openings, will be constructed by entities requesting permits for private driveways and/or public streets that align with such driveways.

5.4 DESIGN OF UTILITIES ON STREET RIGHT-OF-WAY

The design of new or relocated utilities is the responsibility of the utility owner, ensuring that the design is in compliance with the codes and standards of appropriate technical organizations and jurisdictions. The City Engineer shall be notified of any utility installations or repairs (underground or overhead facilities) in which the work will affect the flow of traffic. The ALDOT District Engineer shall be notified of any utility work affecting traffic on state roadways in the City.

Developers shall coordinate all utilities necessary for a development site with the appropriate utility provider.

5.4.1 General Locations

Utilities shall be located within the right-of-way in accordance with the preferences defined by the City, as illustrated in Figure 5.10. A ten (10) foot drainage and utility easement shall be provided along all right-of-way within the City, as shown in the figure.

The preferred location for the water main is on the north and east sides of the streets. The preferred location for sanitary sewers is beneath the roadway, located in the middle of the street or in low-lying areas where the maximum surrounding area can be served. Water lines generally should be installed so that they cross over the top of the sanitary and storm sewers. Refer to the WRM Manual for further guidance.

Utility markings should be placed on curb face and gutter, per the City's Standard Street Details.

Easements are required in situations where utilities cannot be placed within the right-of-way, or covered by an existing easement, and must be installed on private property. The standard easement width is based on two (2) times the depth of cover, rounded up to the nearest multiple of ten (10) feet, with a minimum width of twenty (20) feet wide centered on the utility. The width of the easements shall be increased or extended, where necessary, to provide spaces for utility pole bracing or other construction and maintenance. All water and sewer utility easements shall be dedicated to the City as Drainage and Utility Easements unless otherwise approved and shall not be combined with any other utility easements (i.e., gas, electric, communications, etc.). Water and sewer easements are exclusive and are not to be used to install any other non-City owned and maintained utility. Utility easements can be combined with drainage easements subject to approval by the City Engineer. Where other utilities must be installed inside a water or sewer easement, and where approved by the WRM Department, an Easement Encroachment Agreement will be required with the encroaching utility, as defined in Section 1.7.2 "Easement Encroachment".

FIGURE 5.10
General Utility Locations

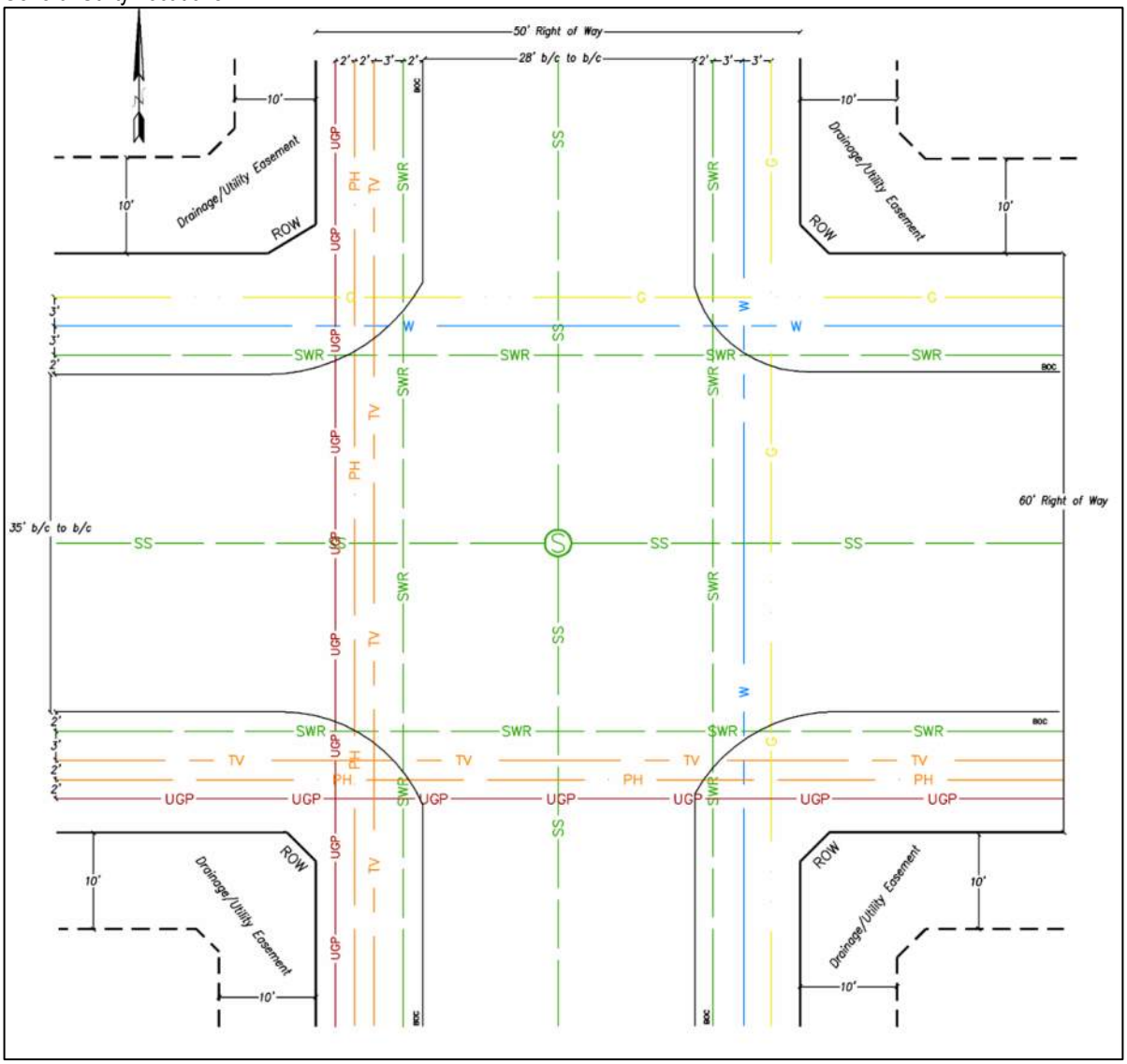

Utility Legend

Cable TV — TV
Power Line — UGP
Gas Line — G
Phone Line — PH
Sewer Line — SS
Water Line — W
Storm Sewer — SWR

5.4.2 General Requirements

The integrity of the roadway pavement structure and side slopes is the primary concern for utility construction within the City's right-of-way. The following guidelines have been prepared to address this concern for all utilities contained within the City's right of way.

5.4.2.1 Excavation and Backfill Requirements

Excavation and backfill activities shall be conducted in accordance with the City Standard Specifications, as applicable.

Excavated material shall be placed in an area to maintain access to both public and private property. If deposited along open trenches, material shall be placed such that in the event of rain there is no damage to the work or the property adjacent to the project. Depending on the duration of the work, a temporary crossing may be required to maintain vehicular or pedestrian traffic.

The width of the trench shall be as wide as deemed necessary by the contractor to assure safe working conditions.

5.4.2.2 Open Cut Installation

Utilities under an unpaved street may be installed by open cut and backfill in accordance with the City standards. Private streets and driveways may be open cut with the approval of the City Engineer provided that access is maintained to the property during work. The City will consider open-cut installation on local roadways or cul-de-sacs that have not been paved or resurfaced within the last five (5) years and access can be maintained during the entire installation process. All other street classifications will require trenchless utility installation. At the discretion of the City Engineer, open-cut utility installation may be required to be performed at night or during off-peak times. The developer, or their representative, shall prepare a traffic control plan for roadway closures related to open cut installation.

5.4.2.3 Bore Installation

The City will require that installation of utilities under paved roadways be installed using trenchless installation methods, with exceptions as noted in Section 5.4.2.2. In cases where the utility service will be provided from existing infrastructure on the opposite side of the roadway, and the utility is located beyond the existing pavement, the installation shall follow the Jack and Bore Detail in Appendix O.

In cases where the utility service will be provided from existing infrastructure that is located under existing pavement, the new infrastructure shall be bored to the travel lane under which the utility is located and an open cut in that lane will be allowed in order to make the connection. All applicable components of the Jack and Bore Detail in Appendix O will apply. The limits of the open cut for the connection shall be minimized to one (1) travel lane to facilitate traffic flow and to reduce the area required to be reconstructed. Open cuts for utility connections shall follow the Utility Patch Detail in Appendix O.

In cases where the utility service will be provided from existing infrastructure that is located under existing pavement and the utility is located under the nearest travel lane, open cut

installation will be allowed. Open cuts for utility connections shall follow the Utility Patch Detail in Appendix O.

Potholing should be used to verify the depth and location to ensure the bore can meet the specifications outlined in the City's Standard Drawings (Jack & Bore Detail and Utility Patch Detail). If the pavement is compromised, the City will expect full repair at the developer's expense.

5.4.2.4 Utility Patch Repairs

All roadway pavements shall be repaired in accordance with the design guidelines provided in the City's Standard Drawings, and Section 5.5.2.

5.5 DESIGN OF PAVEMENTS

The pavement design criteria are intended to supplement the City Standard Drawings. The design criteria outlined in the City's Standard Drawings and Specifications shall take precedence over the ALDOT standard specifications except on State routes. For items not covered by these criteria, the ALDOT standard specifications shall apply.

5.5.1 New Construction

All roadway pavements shall be constructed to meet the specifications of the City, and shall be approved by the City Engineer.

5.5.1.1 Asphalt

All roadway pavements shall be constructed in accordance with the design guidelines provided in the City's Standard Drawings. Alternatives to the full depth pavements or variance to the listed thickness will be considered on a case by case basis, based on subgrade soils and/or expected truck traffic.

5.5.1.2 Concrete

For Portland cement concrete pavements, the typical cross section shall be designed on a case by case basis as approved by the City Engineer. Expected truck traffic and soil conditions shall be considered in the design and depth of concrete pavement.

5.5.2 Pavement Repairs/ Retrofit

All roadway pavements shall be repaired in accordance with the design guidelines provided in the City's standard drawings. A temporary patch must be placed immediately following the work and be in place at least eight (8) weeks prior to placing the final wearing surface. The temporary patch width includes twelve (12) inches either side of the trench and the permanent patch must be twenty-five (25) feet each side of the trench as shown on the standard details.

For resurfacing of streets, a minimum of a thirty (30) foot milled area is required at the extents of paving on each street.

5.5.2.1 Asphalt

Permanent repairs to temporary asphalt patches require at least 5" removal, to a depth at which firm support is reached. It may be necessary to remove some of the subgrade to reach this depth. The width should extend at least one (1) foot beyond the affected pavement area. Edges shall be vertical and smooth. A tack coat should be applied to the vertical face of the patch.

In instances where a standard permanent patch is not deemed necessary by the City, the wearing surface repair shall include the trench width plus an additional twelve (12) inches on either side to provide a smooth tie in.

Hairline cracks and minor surface distortions are repaired with a surface or "skin" patch. Removal of existing pavement is not required. Typically, a layer of hot-mix asphalt is spread over the affected area. An alternative treatment is sprayed emulsified asphalt with an aggregate

mix immediately spread over the area and compacted.

5.5.2.2 Portland Cement Concrete

Where concrete pavements are to be repaired, replacement shall be of the same type and thickness as that removed. Minor repairs may be saw cut and removed. Permanent repairs shall involve the replacement of the entire concrete panel. Low severity cracking may not require the removal of the entire panel; cracks can be routed and sealed. Medium severity cracking may require saw cut, removal and replacement of the damaged portion of the concrete panel. If the concrete panel is cracked in more than three (3) or more pieces the entire panel should be considered for replacement.

The contractor shall not saw cut a panel within two (2) feet of another saw cut or any other joint.

The concrete slab shall be poured in accordance with the provisions in ALDOT's standard specifications.

Concrete panels shall be removed and replaced within the same day. Initial prep work, such as sawing the panel into smaller pieces, may be done the day before removal, but traffic shall be maintained on the roadway overnight. The sections of pavement to be removed shall be removed in such a manner as not to damage the underlying base layer, adjacent concrete slabs, or the joint steel.

The surface finish and slope of the new concrete panel/repair shall be the same as the adjoining concrete panels.

Reinforced Concrete Cement

Joint steel shall be cleaned and reconditioned to maintain the same load transfer as in the original pavement design. Any damaged or destroyed steel, which in the opinion of the City Engineer would not function properly, shall be replaced in kind and retied to the old pavement by drilling an appropriate size hole of the proper depth and anchoring the new bar with an ALDOT approved adhesive material. All tie bars and dowel bars tied to the old pavement shall be anchored into place with an approved adhesive material in such a manner as to meet the pull-out requirement as specified by the ALDOT standard specifications.

Upon removal of the existing concrete panel, all reinforcing steel shall be reconditioned (clean and straighten the steel bars and clean, paint, grease, replace, etc.) or replaced, new tie bars placed, and base cleaned and repaired. After the dowels or tie bars are anchored in place, allow time for the adhesive to set and then allow sufficient time for any required pull-out tests to be performed prior to pouring the replacement slab.

Non-Reinforced Concrete Cement

Pavement repairs for non-reinforced concrete shall include installation of smooth dowel bars, epoxy coated, aligned with the pavement direction and parallel to the plane of surface. Saw cut surfaces shall be sealed with a non-shrinking adhesive material.

5.6 STREET LIGHTING

The City is serviced by three (3) electric service providers: Alabama Power Company, Tallapoosa River Electric Cooperative and Dixie Electric Power Association. Each service provider maintains all street lighting within their respective service areas within the City.

All new subdivisions shall have LED street lighting installed with the subdivision infrastructure in accordance with these guidelines. Lamp sources shall be a minimum one hundred fifty (150) watt HPS equivalents at unsignalized intersections and one hundred (100) watt HPS equivalents at midblock locations and in cul-de-sacs. All new site plan projects shall have lighting installed in parking and/or common areas and at development entrances. Illumination standards shall be as outlined in the City of Auburn Zoning Ordinance.

Standard spacing of streetlights is as follows:

- Midblock lights are to be located no closer than two hundred (200) feet apart and not to exceed five hundred (500) feet apart.
- Spacing for poles sixteen (16) or twenty (20) feet in height with decorative fixtures is recommended to be two hundred (200) to three hundred fifty (350) feet apart.
- Spacing for poles thirty (30) feet in height with cobra head style fixtures is recommended to be spaced three hundred (300) to five hundred (500) feet apart.

Generally, there are two (2) alternatives for the selection of lighting fixtures to be installed. All lighting plans must be submitted and approved by the City prior to the installation of any conduit or wiring associated with the fixtures. The cost of the street lighting should be included in the engineering estimate submitted for the subdivision completion bond.

5.6.1 Standard Cobra Head Fixture

The standard lighting assembly provided by the various service providers is a wood pole with a cobra head fixture. This light is provided at no cost to the citizen if it can be placed on an existing pole and meets the recommended spacing requirements. When installed in a new subdivision, the developer will be responsible for costs associated with installation of the lights. The City will incur the energy usage cost for approved lights that meet the City's standard spacing requirements.

5.6.2 Standard Decorative Fixtures

This alternative allows the option of a combination of decorative lighting assemblies provided by the service provider. The fixtures are installed and maintained by the servicing authority and the cost for this installation is the responsibility of the developer. The City will incur the energy usage cost for approved lights that meet the City's standard spacing requirements.

5.6.3 Light Plan Approvals

Developer shall work with the power company to determine the layout and style of fixture based on these regulations and develop a comprehensive lighting plan for review.

Lighting plans must be submitted to the Traffic Engineer by the power company for review and approval.

5.6.4 Decorative Pedestrian Lighting

In an effort to enhance the City's rights of way within the Downtown Sidewalks and Pedestrian Lighting boundary and/or the Decorative Pedestrian Lighting Master Plan boundary as outlined on the map in Appendix P-4, decorative pedestrian lighting shall be installed with all new development plans, unless otherwise determined by the City. The Decorative Pedestrian Lighting Master Plan can be found on the City of Auburn's website at www.auburnal.gov/engineering-services/publications/. The lighting shall be designed by an Electrical Engineer and be part of the development review and approval process. Lighting and panel locations shall generally be in accordance with the Downtown Sidewalks and Pedestrian Lighting map and/or Decorative Pedestrian Lighting Master Plan based on 100-foot spacing and be in accordance with the City's standard details.

Guidelines for installation of Holophane lighting in the right of way are the following:

1. DRT site plans shall include preliminary spacing and service point location.
2. DRT plans shall include full electrical lighting plans signed and stamped by an Electrical Engineer. Lighting plans shall be submitted on their own sheet, not on the overall electrical sheets. Lighting sheets shall be reviewed and approved by Engineering Services Traffic and Inspection Services Department.
3. All power services shall be underground.
4. Power services are unmetered services. Receptacles, where required, shall have a metered service to be paid by the City of Auburn. Any service connection fees shall be borne by the Developer.
5. Plans need to include:
    a. Foundation details for height above grade in both cut and fill scenarios
    b. Recommended placement locations based on edge of pavement or sidewalk location
    c. Minimum wire burial depth of 36" in conduit (not direct bury)
    d. A note that all conduit shall be continuous-run, red conduit for pedestrian and street lighting
    e. Orientation of poles
    f. In some cases, the panel location may be adjusted to accommodate future lighting adjacent to a proposed development.
    g. Easement requirements for panels and wire not located within the right of way
    h. A note that electrical wiring to be installed in accordance with latest edition of the NEC
    i. A note that power services shall be exclusive for lighting and not facilitated through the building power.

   j. Junction boxes or hand holes, when used, shall be rated to a minimum Tier 15.
   k. Junction boxes and future conduit extensions to property lines shall be required.

6. The contractor is required to call for an inspection from Inspection Services Department for the following:
   a. Prior to pouring concrete foundations
   b. All conduit prior to cover
   c. All electrical wiring
   d. Before permanent power can be supplied
   e. Inspection Services Department will coordinate the final inspection with Traffic Engineering prior to issuing the Certificate of Occupancy.
7. During installation, if any changes are made to the panel location, wiring, or other appurtenances that affect service line size or the overall design, as builts are required. The Electrical Engineer must submit a revised design to the Traffic Engineer prior to the issuance of a Certificate of Occupancy.
8. In some cases, the City may furnish the decorative pedestrian light(s) and/or the electrical panel for use on a project. Conditions that warrant the City providing or paying for the decorative pedestrian lighting and/or electrical panel will be determined during the DRT process and outlined in a Development Agreement.
9. In some cases, as determined by the City Engineer, the developer may be required to provide payment for the required pedestrian lights, and ancillary items, in lieu of installing the lights with the development. See section 5.13 Streetscape Fund for additional information.

5.7 SIGNING AND PAVEMENT MARKINGS

Signs shall be installed on all City streets as required by the MUTCD, latest edition. Signs required on development sites must also be in accordance with the MUTCD. Plans must include sign locations and notes describing sign sizes, reflectivity, etc., per the MUTCD.

Pavement markings and markers are required on all residential collectors, collectors and arterials in accordance with the MUTCD, latest edition. Plans must include striping and notes relative to the placement of temporary and permanent striping. Temporary striping must be in place immediately. Asphalt must cure at least two (2) weeks before the placement of permanent markings.

Solar-powered pavement markers are required at all mid-block crossings permitted during the development review phase. The solar markers must be a double-sided LED, non-flashing, with a white high intensity emitting diode. A submittal will be required prior to ordering and installation.

5.7.1 Street Name Signs

The Traffic Engineering Division of the Engineering Services Department receives many requests each year to provide street name signs and regulatory signs within the City. The City bills the developer/owner a one (1) time charge of one hundred twenty-five ($125.00) dollars per intersection upon installation of City standard street name signs. Please see Appendix P-2 Decorative Street Signs Policy. The standard street name sign is City of Auburn retroreflective blue background with retroreflective white lettering.

Many developers request the use of decorative signs and posts that are unique to their subdivision. Developers may elect to use their own standard sign provided it meets the following criteria set by the City.

1. The Traffic Engineer or City Engineer must approve the sign and signpost.
2. The background and lettering must be retroreflective.
3. The sign must be mounted on a breakaway post in accordance with the MUTCD, latest edition.
4. The sign shall have a dark background with white lettering (all reflective).
5. The sign shall meet minimum letter size requirements established by the MUTCD, latest edition.
6. The lettering font must be similar to a block style.
7. The sign must be installed at a location identified by the MUTCD, latest edition, (The Traffic Engineer will be available for consultation prior to sign installation if necessary).
8. Special insignia for the subdivision may be used if approved by the Traffic Engineer or City Engineer.

5.7.2 Regulatory Signs

Regulatory signs are traffic signs intended to instruct road users on what they must or should do (or not do) under a given set of circumstances. The term regulatory sign describes a range of signs that are used to indicate or reinforce traffic laws, regulations or requirements which apply either at all times or at specified times or places upon a street or highway, the disregard of which may constitute a violation. These criteria are set out in the MUTCD, which specifies conditions for the installation as well as requirements of maintenance.

Developers may elect to use their own standard sign provided it meets the following criteria set by the City.

1. The Traffic Engineer or City Engineer must approve the sign and signpost.
2. The sign must be mounted on a breakaway post in accordance with the MUTCD, latest edition.
3. The sign must meet minimum requirements established by the MUTCD, latest edition, including size and color.
4. The sign shall be fabricated from high intensity prismatic material that satisfies the requirements set forth in the MUTCD.
5. The sign must be installed at a location identified by the MUTCD, latest edition. (The Traffic Engineer will be available for consultation prior to sign installation if necessary).

5.7.3 Application for Signs (New Development)

Developers should make application for street name signs and regulatory signs for new developments at the earliest possible date. The application must be received by the Engineering Services Department and the name must approved by the Planning Commission before a development is advertised. The City will not be responsible for problems that result if the development is advertised prior to approval of the development/street name or if the application is rejected.

The request form is available in Appendix P of this Manual.

When a sign request is received, the necessary studies and reviews will be completed to determine whether or not a sign will be approved for installation. If the Traffic Engineer recommends installing the sign, installation of the sign will be approved and cost allocations for the installation will be set. If it is determined that the sign not be installed, a representative of the Engineering Services Department will send a letter explaining the decision to the Applicant, including available informational materials.

All signs approved for installation shall be installed by the Engineering Services Department or under the Department's supervision. The Traffic Engineer will establish the ultimate location of approved signs.

5.7.4 Replacement for Decorative Signs

The City will not be responsible for replacement of decorative signs and signposts. If a decorative sign or signpost is damaged, the developer/owner is responsible for replacing and or repairing the sign in a timely manner. If necessary, the City will install a temporary replacement sign until a new sign is obtained. Upon installation of the new decorative sign, the temporary signs and signposts must be returned to the City. If sign is not returned, the City will bill the developer or homeowners association for the cost of the temporary sign.

5.8 RIGHT-OF-WAY PLANTING

All plantings within the right-of-way must be approved by the City Arborist prior to installation. Trees placed within the public right-of-way shall not be of a low, bushy species that might obstruct sight distance. No such trees shall be planted unless approved by the City Arborist, who shall determine whether they pose a threat to public safety of the efficient use of public facilities. Trees shall not be placed in any location where they may damage or impede access to buried utility lines, sidewalks or streets. Canopy trees shall not be planted within ten (10) feet of water or sanitary sewer utilities.

New trees installed within the right of way as part of a development shall be installed per the City's detail, including a tree well, grate, and brick color to match the Toomer's Corner color Pine Hall Brick English Edge Full Range, or approved equal. Tree locations and species shall be coordinated with City staff during the DRT process. Silva Cells may be required as part of the tree installation along College Street from Glenn Avenue to Magnolia Avenue and along Magnolia Avenue from Wright Street to Gay Street.

In some cases, as determined by the City Engineer, the developer may be required to provide payment for the required street trees, and ancillary items, in lieu of installing the trees with the development. See section 5.13 Streetscape Fund for additional information.

5.9 ACCESS MANAGEMENT AND COORDINATION

The purpose of this section is to establish minimum regulations for access to property. Standards are established for new roads, driveways, shared access, parking lot cross access, and service roads throughout the City. When access management standards are implemented, there are many potential benefits.

- Promote safe and efficient travel within the City
- Minimize disruptive and potentially hazardous traffic conflicts
- Ensure safe access by emergency vehicles
- Protect the public investment in the street system by preserving capacity and avoiding the need for unnecessary and costly reconstruction
- Separate traffic conflict areas by reducing the number of driveways
- Provide safe spacing standards between driveways and between driveways and intersections
- Provide for shared access between abutting properties
- Ensure reasonable access to properties (not necessarily the most direct access)
- Coordinate access decisions with the Planning Commission and City Council

The access management standards in this Manual shall be applied in addition to the requirements of the Zoning Ordinance, the Subdivision Regulations and the Major Street Plan.

ALDOT is responsible for access permits along State and Federal routes. The City oversees land use, subdivision, and site design decisions that affect access needs. State and local coordination is essential to effective access management. Lack of coordination can undermine the effectiveness of regulatory programs and cause unnecessary frustration for permit applicants.

Timely communications are essential to an effective review procedure, and it begins with a coordinated process for review of access permits along State routes. Applicants should send completed permit applications for access to State controlled roadways to the appropriate ALDOT office with copies being transmitted to the City Engineer. Prior to any decision or recommendation concerning permitting of access, the local reviewing official and the State permitting official should discuss the application.

Property owners will be required to submit the necessary certificates of approval from other affected regulatory agencies, before a Building Permit is issued. An effective method of coordinating review and approval between developers and various government agencies is through a tiered process. The first stage is an informal meeting and “concept review” period, which allows officials to advise the developer about information needed to process a development application. This includes information on required State and local permits, and any special considerations for the development site. The concept review provides the developer with early feedback on a proposal, before the Preliminary Plat or site plan has been drafted. Once the preliminary plan is drafted, it can be checked to determine if additional conditions are required

for approval. The final plan that is formally submitted should then require only an administrative review.

An Applicant of an access permit on a State controlled roadway should request a response be transmitted to the City from ALDOT prior to approval of plats on the State highway system. Applicants are required to send a copy of the application to the State access permitting official. This shall occur early in the plat review process, preferably during conceptual review. Early monitoring of platting activity would allow ALDOT an opportunity to identify problems and develop acceptable alternatives.

5.9.1 Transit Stops

Purpose built student housing constructed along an arterial or collector outside of the Urban Core (UC) shall install a transit bus stop in accordance with the City's standard details. In some cases, purpose-built student housing constructed along an arterial or collector in other zones may also be required to install a transit bus stop. The location shall be coordinated with Auburn University Parking Services during the DRT process and be shown on the final plans. All transit stops must be completed prior to the issuance of Certificate of Occupancy.

5.10 CONSTRUCTION

The developer and/or contractor is responsible for subsurface investigation, construction, testing, coordinating inspections, etc. and performing all work required to complete a project. Refer to the City Standard Specifications, Section 10, which applies to the construction and installation of streets, including excavation, backfill, materials and testing.

In residential subdivisions, the final wearing surface shall not be applied until seventy-five (75%) percent build-out of the subdivision. In most cases, installation of final wearing surface and other infrastructure should be installed when the development is substantially completed (90% of residential units have been issued Certificates of Occupancy). No phase of a subdivision will be permitted to carryover outstanding improvements for more than four (4) years after the placement of the binder.

5.11 PRIVATE STREETS

Private streets and driveways must be constructed to the City's buildup standards for public street and alley construction. The plans for private street construction must be reviewed and approved by the Development Review Team. The private street or driveway should commence as part of the overall development, but the construction shall be inspected and certified by a qualified geotechnical company. The construction certification shall be submitted to the City prior to the Certificate of Occupancy being issued. Private streets can be constructed on a separate lot or within a common ingress/egress easement. The lot or easement covering the street shall grant the City unrestricted use of the property for emergency access, solid waste collection, and utilities and maintenance of same, if applicable.

Private streets generally serve single-family detached units on a single lot of record. Private streets shall be a minimum of twenty (20) feet wide to meet the International Fire Code as adopted by the City of Auburn. When a fire hydrant is located on a fire apparatus access road, the minimum road width shall be 26 feet, exclusive of shoulders, for at least 40′ at the hydrant. Private streets must also be sized to accommodate the traffic generated by the development per the traffic study approved by the City. Private streets and driveways shall be a primary route through the site and may include on-street parking; however, in most cases, private streets or driveways do not include parking. Private streets serving multiunit developments may be required to install sidewalk on at least one side of the street. During the DRT review, those requirements will be stipulated.

5.12 GREENWAYS

As Auburn has grown, community leaders have recognized the benefits of combining recreational uses, greenspace conservation goals and multimodal transportation projects by aggressively pursuing shared use off-road paths for pedestrians and bicyclists. These concepts were institutionalized in the Auburn 2020 Plan, through the Bicycle Plan, which defined the supporting strategies as promoting greenways with bikeway components and requiring recreational bikeways within greenbelts, as well as the Family and Community recommendations to develop bicycle and walking trails to provide connectivity to various recreation, neighborhood and activity centers. There are economic, social and environmental benefits of greenways and their use is recommended to buffer between competing land uses, soften the urban landscape and provide connectivity between parks and activity centers. Additionally, greenways can protect key watersheds and preserve riparian buffers along the creeks and waterways.

Five greenways have been identified as priorities for the City. Conceptually, a trail system will be most feasible and economical if it follows the creek in some areas, and in others, parallels, or "piggy-backs" on, existing sewer easements. The use of sewer easements for trail systems is common in that it allows for the expanded community use of existing undevelopable land, and often property owners are amenable to amending the existing easements as connection to a trail network can be a valuable amenity to new and existing developments. Second, easements are typically already well maintained, and of sufficient width and topography to allow more economical trail constructions. Lastly, by improving the easements, access to sanitary sewer lines is enhanced for maintenance purposes and the increased presence of joggers, cyclists and walkers increases the overall security of those assets. Incidentally, since the improvements are a significant benefit to sewer operations, some improvements can be justifiably funded with current sewer rate revenues.

If required, greenways shall be constructed in accordance with the Greenspace Map or the Parks, Recreation and Culture Master Plan and be identified during the Preliminary Plat or DRT process. As part of the Development Review, the type of greenway to be constructed shall be identified.

5.13 Streetscape Improvements Fund

In some cases, the City Engineer may require the developer to provide an equivalent payment to the city for required streetscape improvements in lieu of constructing the improvements with the development. The developer or their engineer shall prepare and submit a line-item estimate using the City's subdivision completion bond unit rates for the associated improvements. Required streetscape improvements which may be paid for in lieu of construction include, but are not limited to:

- Sidewalks
- Multi-use paths
- Pedestrian Lights & ancillary equipment
- Tree wells & grates
- Landscaping, including soil amendments and irrigation
- Decorative concrete and pavers

Fund payments shall also include the costs of any demolition, utility relocations, right-of-way or easement acquisitions, and any other items that would typically be associated with constructing the required improvements.

The payment provided to the City shall be used at the City's discretion to construct the streetscape improvements at a later date or shall be used to construct streetscape improvements identified in master plans or capital improvement projects elsewhere in the City of Auburn. Payment in lieu of constructing the improvements may be required when the streetscape improvements are on roadways that do not have similar streetscape items already in place and are not on the City's Capital Improvements Plan. Payment may also be required in situations where constructing such improvements would delay, prohibit, add significant costs, or otherwise interfere with other City initiatives and projects.

5.14 Transportation Improvements Fund

In some cases, the City Engineer may require the developer to provide an equivalent payment to the city for required transportation improvements in lieu of constructing the improvements with the development. The developer or their engineer shall prepare and submit a line-item estimate using the City's subdivision completion bond unit rates for the associated improvements. Transportation improvements which may be paid for in lieu of construction include, but are not limited to:

- Right & Left Turn Lanes
- Signalized Intersection Improvements
- Roundabouts
- Overlays, Resurfacing, & Striping
- Street Lighting
- Bicycle Facilities

Fund payments shall also include the costs of any demolition, utility relocations, right-of-way or easement acquisitions, and any other items that would typically be associated with constructing the required improvements.

The payment provided to the city shall be used at the City's discretion to construct the improvements at a later date or shall be used to construct transportation improvements identified in master plans or capital improvement projects elsewhere in the City of Auburn. Payment in lieu of constructing the improvements may be required when the traffic improvements are not on the City's Capital Improvements Plan, or in situations where constructing such improvements would delay, prohibit, add significant costs, or otherwise interfere with other city initiatives and projects.

APPENDIX K. Arterial Roads List

This page intentionally left blank.

APPENDIX K. Arterial Roads List:

Alabama Street (W. Samford Avenue to Pumphrey Avenue)
Beehive Road (Cox Road to Wire Road)
Bent Creek Road (I-85 to E. Glenn Avenue)
Chadwick Lane
College Street
Cox Road
Dean Road (Moores Mill Road to Opelika Road)
Donahue Drive (W. Farmville Road to E. University Drive)
East University Drive
Farmville Road
Gay Street (Opelika Road to Samford Avenue)
Glenn Avenue (N. Donahue Dr. to City Limits)
Heath Road (AL 147)
Martin Luther King Drive
Moores Mill Road
Opelika Road
Pumphrey Avenue
Richland Road
Samford Avenue
Sandhill Road
Shelton Mill Road
Shug Jordan Parkway (AL 267/147)
Society Hill Road
Wire Road (Heisman Dr. to City Limits)

Highway Roads List:

U.S. Highway 280

Generally, information is updated quarterly

This page intentionally left blank.

APPENDIX L. Collector & Residential Collector Road List

This page intentionally left blank.

APPENDIX L. Collector Roads List:

Academy Drive (Gatewood Dr. to NW Terminus)
Airport Road
Annalue Drive
Auburn Lakes Road
Beehive Road (Wire Rd. to Martin Luther King Dr.)
Bent Creek Road (Hamilton Road to I-85)
Binford Drive
Bragg Avenue
Bud Black Road
Byrd Street (W. Magnolia Avenue to MLK Drive)
Cary Creek Parkway
Chewacla Drive
Commerce Drive
S. Dean Road (E. University Dr. to Moores Mill Rd.)
N. Dean Road (Opelika Road to Sandstone Lane)
Dekalb Street (Opelika Road to Terminus)
S. Donahue Drive (E. University Dr. to E. Longleaf Dr.)
Drake Avenue (N. Donahue Drive to N. Ross Street)
Gatewood Drive
S. Gay Street (Samford Avenue to E. University Drive)
N. Gay Street (Opelika Road to Shelton Mill Road)
W. Glenn Avenue (N. Donahue Drive to Byrd Street)
Grand National Parkway
Grove Hill Road (Ogletree Road to Terminus)
Hamilton Road (Moores Mill Road to City Limits)
Harper Avenue
Longleaf Drive
Magnolia Avenue
Mill Creek Road
Miracle Road
Mitcham Avenue
Moores Mill Road (Society Hill Rd. to City Limits)
Mrs. James Road
Ogletree Road
Old Cox Road
Pear Tree Road
Rolling Ridge Road
Ross Street
Saugahatchee Road (Annalue Dr. to Airport Rd.)
Shell Toomer Parkway
Society Hill Road (Sandhill Rd. to Terminus)
Southview Drive
Stonewall Road
E. Thach Avenue
Veterans Boulevard
Will Buechner Parkway
Willis Turk Road
Wire Road (W. Magnolia Ave. to Heisman Dr.)
Woodfield Drive (S. College Street to S. Gay Street)
Wrights Mill Road (Samford Ave. to Shell Toomer Pkwy)
Yarbrough Farms Boulevard (Richland Road to Terminus)

Updated: March 1, 2024

This page intentionally left blank.

Residential Collector Roads List:

Academy Drive (City Limits to Terminus)
Asheton Lane
Bedell Avenue
Club Creek Drive (Yarbrough Farm to Falls Crest Dr.)
Conservation Drive
Cotswold Way
Crescent Boulevard (Piedmont Dr. to N. Donahue Dr.)
Debardeleben Street (E. Glenn Avenue to E. Thach Avenue)
Deer Run Road
Dekalb Street (E. University Dr. to terminus)
Downs Way
Foster Street
Grove Hill Road (Moores Mill Road to Terminus)
James Burt Parkway
Keystone Drive
Longwood Drive
Lundy Chase Drive
Monticello Drive
Moores Mill Drive
Old Mill Road
Piedmont Drive
Preserve Drive (Conservation Dr. to northern terminus)
Rock Fence Road
Sanders Street
Solamere Lane
Stanton Drive (VFW Road to Grove Hill Road)
Tacoma Drive
Tuscany Hills Drive
VFW Road (Binford Drive to Stanton Drive)
Watercrest Drive
Yarbrough Farms Boulevard

Generally, information is updated quarterly.

Updated: March 1, 2024

This page intentionally left blank.

APPENDIX M. Local Commercial/ Local Street/ Cul-de-Sacs/ Alleys List

This page intentionally left blank.

APPENDIX M. Local Commercial/ Local Streets/ Cul-De-Sacs/ Alleys List

Local Commercial Roads List:

Bucees Boulevard
Corporate Parkway
Enterprise Drive
Haley Lane
Industry Drive
Innovation Drive
Mall Boulevard
Mall Parkway
McMillan Street
Paul Parks Lane
Riley Street
Samford Trace Court
Samford Village Court
Samglenn Drive
Technology Parkway
West Tech Lane

All other City streets, as applicable.

This page intentionally left blank.

APPENDIX O. Street Details and Standard Drawings

This page intentionally left blank.

TYPICAL STREET CROSS SECTION WITH CURB/GUTTER AND SIDEWALK

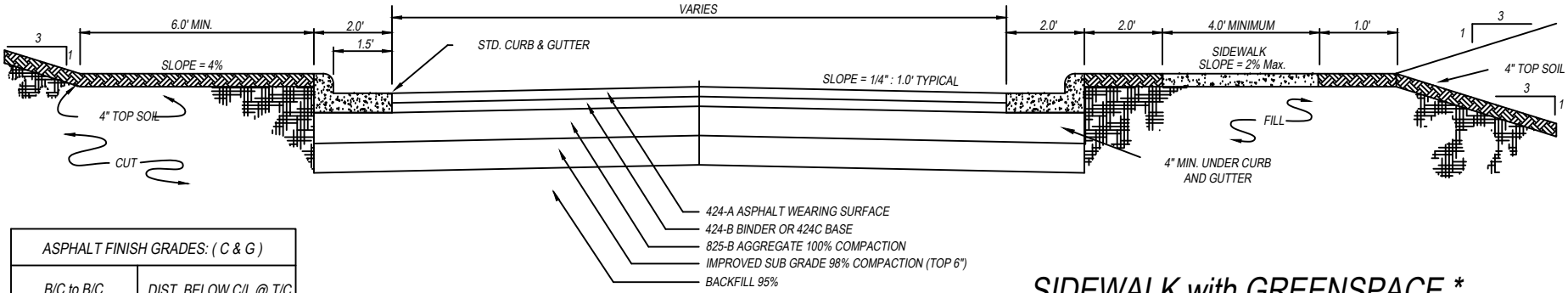

ASPHALT FINISH GRADES: (C & G)	
B/C to B/C	DIST. BELOW C/L @ T/C
26.0'	2.00"
28.0'	1.75"
31.0'	1.38"
35.0'	0.88"
40.0'	0.26"

SIDEWALK with GREENSPACE *

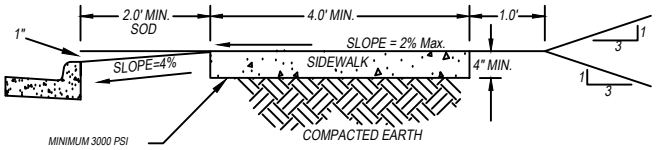

5' SIDEWALK

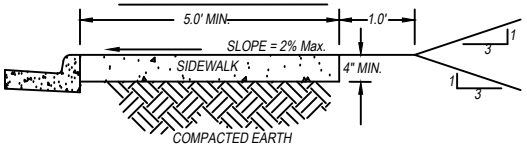

STREET BUILDUP						
	0 TO 2,000 VPD		2,001 TO 5,000 VPD		5,001 AND GREATER	
CLASSIFICATION	ALLEY/CUL-DE-SAC LOCAL RESIDENTIAL		RESIDENTIAL COLLECTOR		COLLECTOR/ARTERIAL LOCAL COMMERCIAL	
	CLASS II		CLASS III		CLASS IV	
	FULL DEPTH	ASPHALT/BASE	FULL DEPTH	ASPHALT/BASE	FULL DEPTH	ASPHALT/BASE
WEARING SURFACE (424A)	1"	1"	2"	1"	2"	1"
BINDER (424B) OR BASE (424C)	* 4"	2"	* 5"	* 4"	* 6"	* 4"
CRUSHED AGGREGATE BASE 825B		6"		6"		* 9"

NOTES: MIXES SHALL COMPLY WITH THE LATEST EDITION OF THE ALABAMA DEPARTMENT OF TRANSPORTATION STANDARD SPECIFICATIONS.
* BINDER OR BASE LAYER TO BE PLACED IN TWO EQUAL LIFTS.

NOTES:
1. PROVIDE 1 1/2" DEEP BY 1/8" WIDE CONTROL JOINTS EVERY 5' WITH EXPANSION JOINTS EVERY 50'. EXPANSION MATERIAL CAN BE FILTER BOARD OR A TREATED 1x4.
2. WHEN THE DISTANCE BETWEEN THE BACK OF CURB AND THE EDGE OF SIDEWALK IS LESS THAN TWO FEET, THE SIDEWALK MUST BE A MINIMUM OF FIVE FEET WIDE.
3. SIDEWALK (ACCESSIBLE ROUTE) WITH CLEAR WIDTH LESS THAN 60 INCHES SHALL PROVIDE PASSING SPACES AT INTERVALS OF 200 FEET MAXIMUM. PASSING SPACES SHALL BE COMPLIANT WITH PROWAG STANDARDS.
4. WHERE SIDEWALK ABUT INLET TOPS, #4 REBAR PLACED 12" O.C. SHALL BE PLACED 6" MIN. INTO INLET TOP AND 12" MIN. INTO SIDEWALK.
* 4 FOOT WIDTH IS ALLOWED ON LOCAL STREETS AND CUL DE SAC'S. 5 FOOT MINIMUM IS REQUIRED ON ALL ARTERIALS, COLLECTORS, LOCAL COMMERCIAL, AND RESIDENTIAL COLLECTORS.

STANDARD DETAILS: STREETS	5.00
City of Auburn	
DEPARTMENT: ENGINEERING	REVISIONS:
SCALE: N.T.S.	
DRAWN BY: GINA McCRICKARD	
CITY ENGINEER: Alison Frazier	
APPVD. BY: Alison Frazier	
IMPLEMENTED: 01-01-2022	

TYPICAL STREET CROSS SECTION WITH CURB AND GUTTER

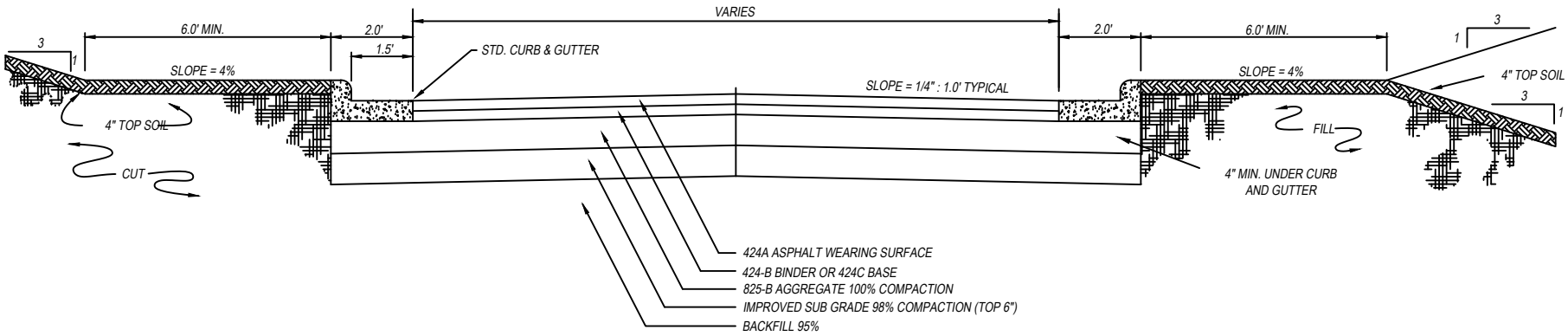

*TYPICAL STREET CROSS SECTION WITHOUT CURB AND GUTTER

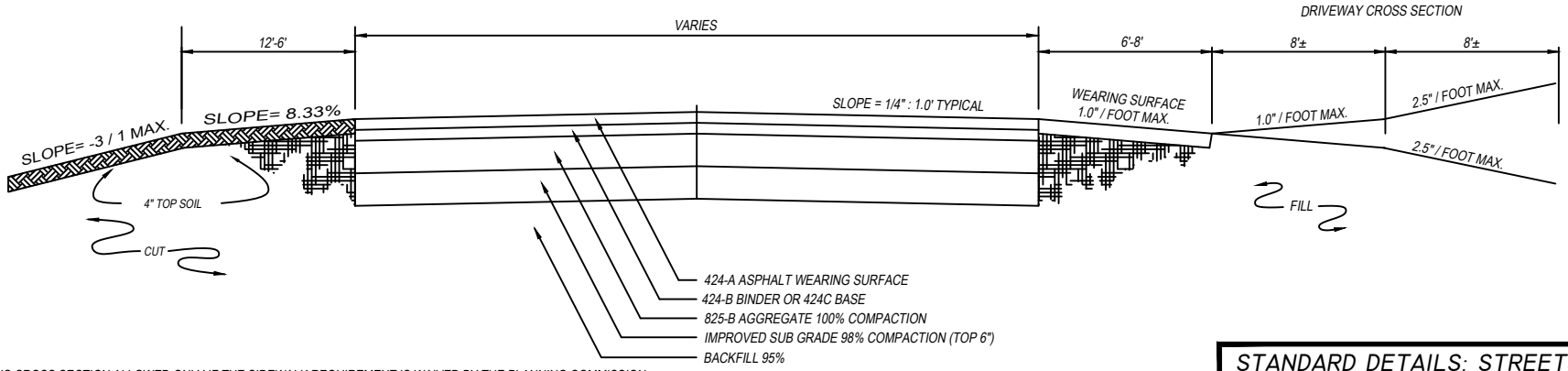

* THIS CROSS SECTION ALLOWED ONLY IF THE SIDEWALK REQUIREMENT IS WAIVED BY THE PLANNING COMMISSION.

STANDARD DETAILS: STREETS	5.01
City of Auburn	
DEPARTMENT: ENGINEERING	REVISIONS:
SCALE: N.T.S.	03-01-2024
DRAWN BY: GINA McCRICKARD	
CITY ENGINEER: Alison Frazier	
APPVD. BY: Alison Frazier	
IMPLEMENTED: 01-01-2022	

TYPICAL STREET CROSS SECTION
WITHOUT CURB/GUTTER, AND WITH SIDEWALK

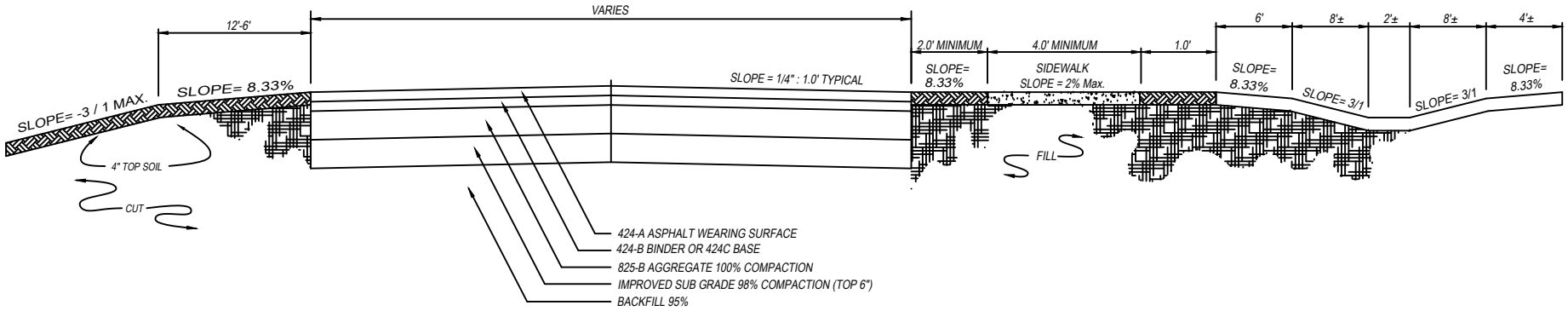

STREET AND SIDEWALK CONFIGURATIONS				
CLASSIFICATION	B/C to B/C WIDTH	PAVEMENT WIDTH	ROW	SIDEWALK LOCATION
ALLEY (ONE-WAY)	NOT REQUIRED	11	25	NOT REQUIRED
ALLEY (TWO-WAY)	NOT REQUIRED	20	30	NOT REQUIRED
CUL-DE-SAC	26	22	50	1 SIDE*
LOCAL RESIDENTIAL	26	22	50	BOTH SIDES
LOCAL RESIDENTIAL	28	24	50	1 SIDE*
LOCAL COMMERCIAL	28	24	50	1 SIDE*
RESIDENTIAL COLLECTOR	31	27	60	BOTH SIDES
COLLECTOR	35	31	60	1 SIDE*
COLLECTOR	31	27	60	BOTH SIDES
COLLECTOR @ INTERSECTIONS	40	36	60	BOTH SIDES
ARTERIAL	52	48	80	BOTH SIDES

* CITY ENGINEER SHALL DETERMINE LOCATION OF SIDEWALK.

SOD DETAIL

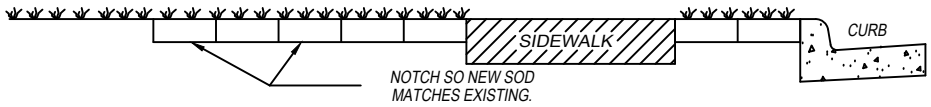

STANDARD DETAILS: STREETS	5.02
City of Auburn	
DEPARTMENT: ENGINEERING	REVISIONS:
SCALE: N.T.S.	03-01-2024
DRAWN BY: GINA McCRICKARD	
CITY ENGINEER: Alison Frazier	
APPVD. BY: Alison Frazier	
IMPLEMENTED: 01-01-2022	

TYPICAL STREET CROSS SECTION WITH A UTILITY CORRIDOR

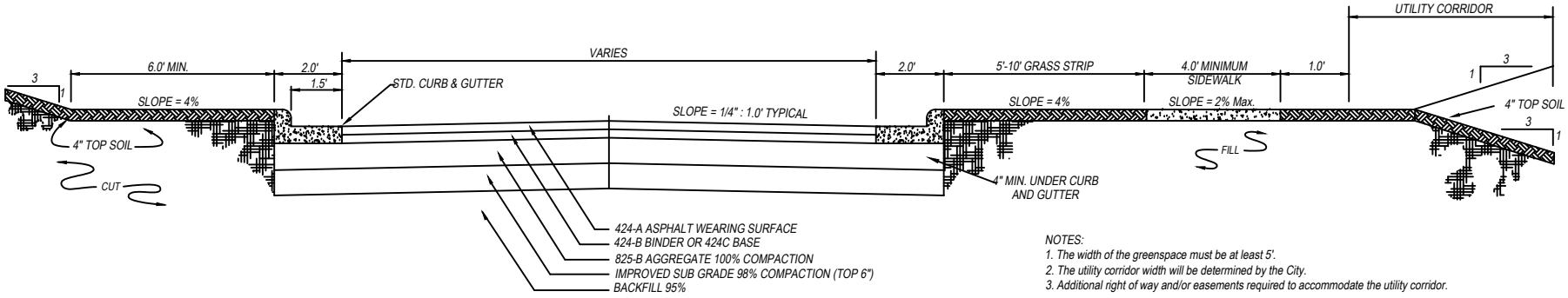

NOTES:
1. The width of the greenspace must be at least 5'.
2. The utility corridor width will be determined by the City.
3. Additional right of way and/or easements required to accommodate the utility corridor.

TYPICAL STREET CROSS SECTION WITH A LANDSCAPE CORRIDOR

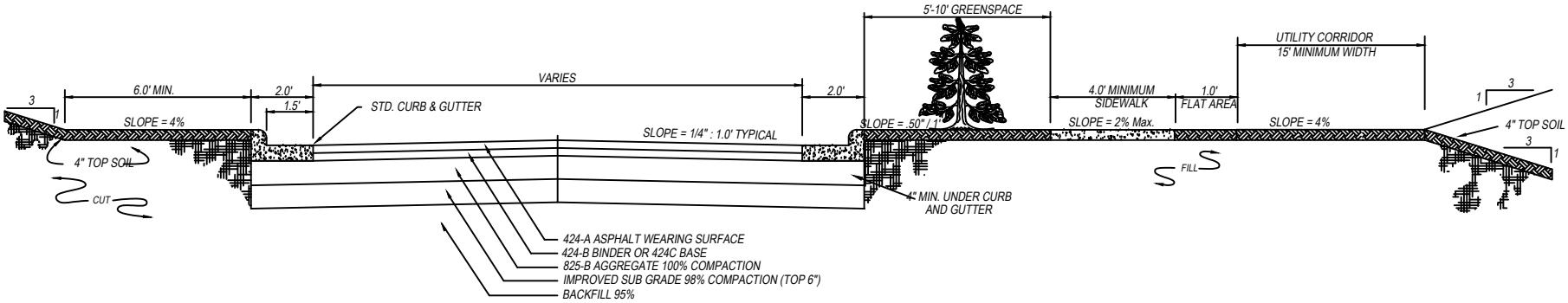

NOTES:
1. THE WIDTH OF THE GREENSPACE MUST BE AT LEAST 5'. IF THE GREENSPACE CONTAINS CANOPY TREES, A 10' MINIMUM WIDTH IS REQUIRED.
2. THE UTILITY CORRIDOR WIDTH SPECIFIED APPLIES WHERE A WATER MAIN IS INSTALLED ON THE NORTH AND EAST SIDES. OTHER WIDTHS MAY BE PERMITTED.
3. ADDITIONAL RIGHT OF WAY AND/OR EASEMENTS REQUIRED TO ACCOMODATE THE UTILITY CORRIDOR.
4. THE UTILITY CORRIDOR CAN BE USED ON BOTH SIDES OF THE STREET. MINIMUM WIDTHS AND CONFIGURATION WILL BE BASED ON THE PRESENCE OF SIDEWALK.

STANDARD DETAILS: STREETS	5.03
City of Auburn	
DEPARTMENT: ENGINEERING	REVISIONS:
SCALE: N.T.S.	
DRAWN BY: GINA McCRICKARD	
CITY ENGINEER: Alison Frazier	
APPVD. BY: Alison Frazier	
IMPLEMENTED: 01-01-2022	

FLUME DETAIL

NOTES:

1. SIZE OF FLUME TO BE DETERMINED BASED ON DRAINAGE CALCULATIONS SUBMITTED BY AN ENGINEER.

2. A TOEWALL SHALL BE INSTALLED AT THE END OF THE FLUME AT LEAST 12" DEEP BY THE WIDTH OF THE FLUME.

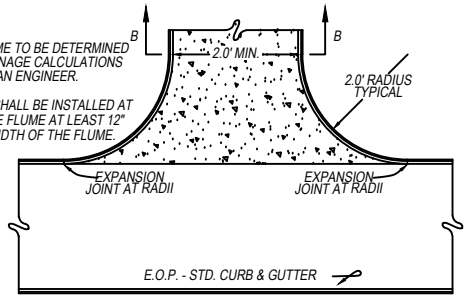

FLUME DETAIL

SECTION B-B

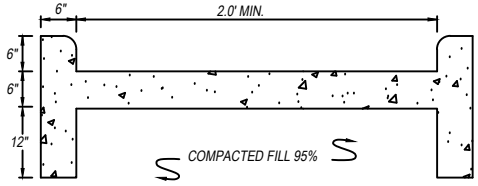

CONCRETE SWALE

NOTE:

SIZE OF SWALE TO BE DETERMINED BASED ON DRAINAGE CALCULATION SUBMITTED BY AN ENGINEER.

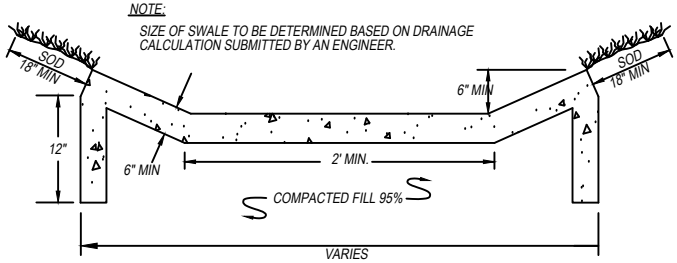

CURB & GUTTER

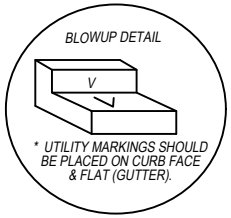

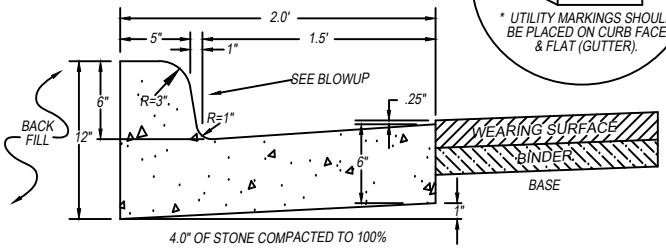

** USE OF SPILL CURB MUST BE REVIEWED AND APPROVED PRIOR TO INSTALLATION

HEADER CURB

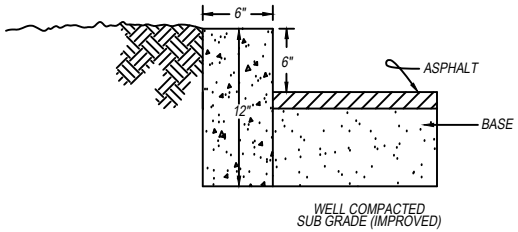

ROLL CURB

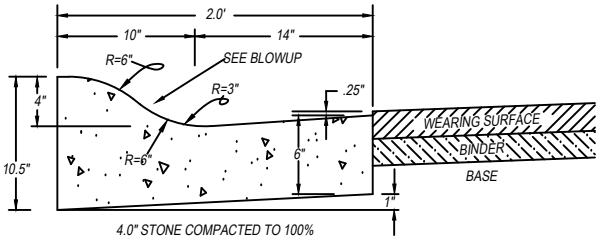

STANDARD DETAILS: STREETS	5.04
City of Auburn	
DEPARTMENT: ENGINEERING	REVISIONS:
SCALE: N.T.S.	
DRAWN BY: GINA McCRICKARD	
CITY ENGINEER: Alison Frazier	
APPVD. BY: Alison Frazier	
IMPLEMENTED: 01-01-2022	

DRIVEWAY / SIDEWALK WITH 4.0' GREENSPACE

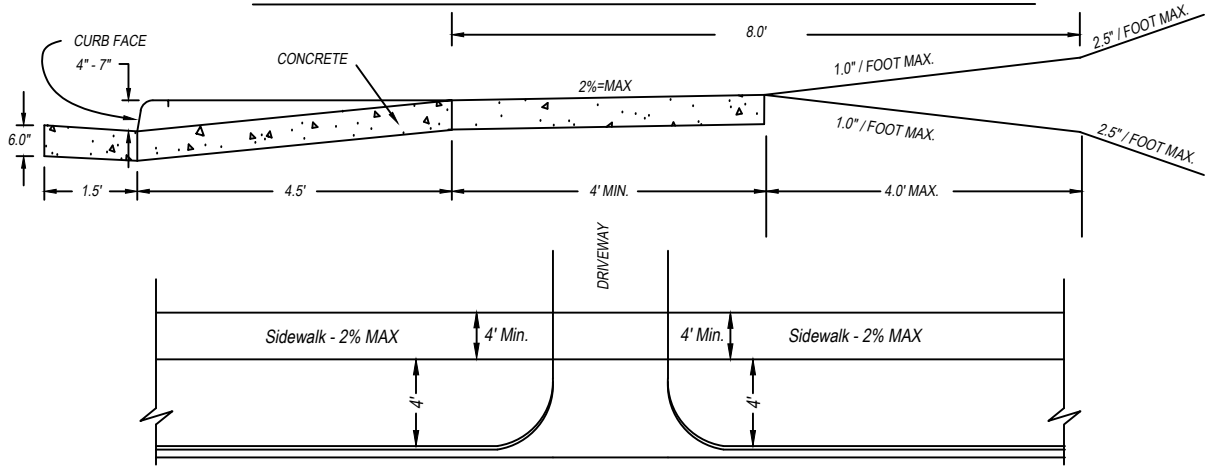

DRIVEWAY / SIDEWALK WITH 2.0' GREENSPACE

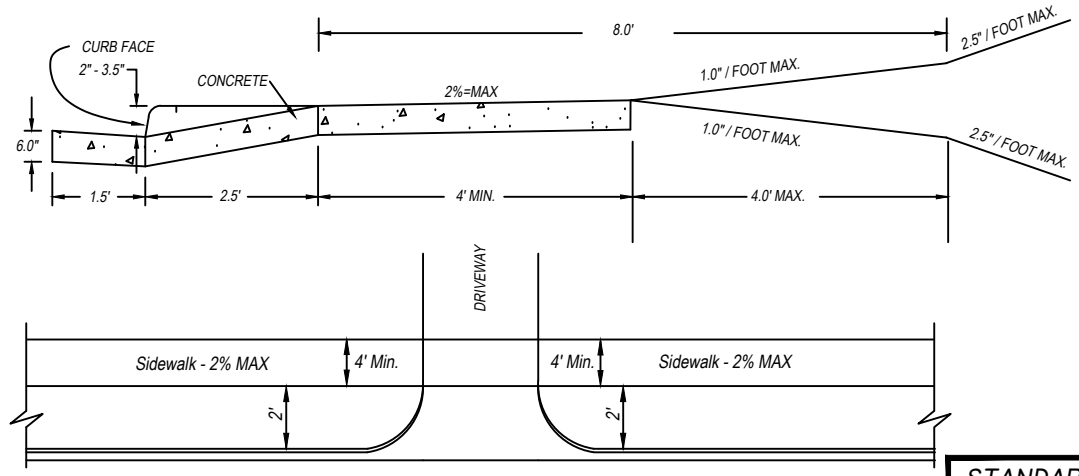

STANDARD DETAILS: STREETS	5.05
DEPARTMENT: ENGINEERING	REVISIONS:
SCALE: N.T.S.	
DRAWN BY: GINA McCRICKARD	
CITY ENGINEER: Alison Frazier	
APPVD. BY: Alison Frazier	
IMPLEMENTED: 01-01-2022	

City of Auburn

NOTES:

1. SIDE SLOPES FOR STREETS SHALL VARY FROM A POINT SIX (6') FEET BEHIND THE CURB TO THE EXISTING ELEVATION AT THE RIGHT OF WAY (R.O.W.), EXCEPT THAT SUCH SLOPE SHALL NOT BE GREATER THAN 3:1. IN CASES WHERE A 3:1 SLOPE CARRIES THE CONSTRUCTION LIMITS BEYOND THE R.O.W. LINE, THE CONTRACTOR SHALL BE RESPONSIBLE FOR ANY CLEARING & GRUBBING, EXCAVATION, BACKFILL, MULCHING OR ANY OTHER WORK REQUIRED TO ACCOMMODATE THE 3:1 SLOPE. IN CASES WHERE ROCK IS ENCOUNTERED, THE SLOPE MAY BE 2.5:1 IN THE ROCK PORTION.

2. FOR PORTLAND CEMENT CONCRETE PAVEMENTS, THE TYPICAL CROSS SECTION SHALL BE DESIGNED ON A CASE BY CASE BASIS.

3. CURB AND GUTTER SHALL BE CAST IN PLACE WITH THE FOLLOWING REQUIREMENTS: EXPANSION JOINT AT FIFTY (50.0') FOOT INTERVALS WITH DUMMY JOINTS AT TEN (10.0') FOOT INTERVALS. WHEN ELECTRIC, GAS, SEWER OR WATER SERVICE LINES ARE IN PLACE, AN "E", "G", "S" OR "W" SHALL BE MARKED ON CURB FACE AND FLAT/GUTTER AT THE APPROPRIATE LOCATION(S. AFTER THE CURB & GUTTER HAS BEEN CURED, EXTRA PRECAUTIONS WILL BE TAKEN DURING BACKFILLING AND/OR OTHER ACTIVITIES TO PREVENT DAMAGE OR MARRING OF FINISH; REFER TO CURB & GUTTER DETAILS FOR PLACEMENT OF UTILITY MARKINGS WITH A MIN. OF 4"x2" LETTERS.

4. ALL ROADWAY MATERIALS (ASPHALT AND CRUSHED AGGREGATE BASE) SHALL COMPLY WITH THE CURRENT ALDOT STANDARDS, UNLESS OTHERWISE APPROVED BY THE CITY ENGINEER.

5. TACK POINTS (PRIME) SHALL BE APPLIED PRIOR TO WEARING SURFACE APPLICATION, AND BETWEEN LAYERS OF PAVEMENT MATERIAL FOR RESURFACING PROJECTS. TACK SHALL COMPLY WITH CURRENT ALDOT SPECIFICATIONS. IN ADDITION, IF PAVING OPERATION IS DELAYED, OR EDGES BECOME DIRTY OR MUDDY, ALL DIRT AND MUD MUST BE REMOVED PRIOR TO APPLYING TACK COAT.

6. BASE AND WEARING SURFACE REQUIREMENTS ARE BASED ON CBR OF 6-9 FOR SUBGRADE SOILS. ALTERNATE DESIGN FOR FULL DEPTH PAVEMENTS OR VARIANCE TO LISTED THICKNESSES WILL BE CONSIDERED ON A CASE BY CASE BASIS, BASED ON SUBGRADE SOILS AND/OR EXPECTED TRUCK TRAFFIC.

7. PROVIDE 1 1/2" DEEP BY 1/8" WIDE CONTROL JOINTS EVERY 5' WITH EXPANSION JOINTS EVERY 50'. EXPANSION MATERIAL CAN BE FIBER BOARD OR A TREATED 1X4.

8. FOR NON CURB AND GUTTER STREETS, A PAVED DRIVEWAY TURNOUT IS REQUIRED. SLOPES MUST MEET ILLUSTRATED REQUIREMENTS ON THESE DETAILS.

9. ALL TREE PLANTINGS WITHIN THE RIGHT OF WAY MUST BE APPROVED BY THE CITY OF AUBURN PUBLIC WORKS DEPARTMENT PRIOR TO INSTALLATION. PLANTINGS SHALL BE IN ACCORDANCE WITH THE STANDARD DETAIL.

10. WHEN A DEVELOPMENT WARRANTS THE WIDENING OF THE ROADWAY THAT WILL ALTER THE CURRENT TRAFFIC STRIPING, THE DEVELOPER, AT THEIR EXPENSE , SHALL PROVIDE A ONE INCH (1") OVERLAY. THE LIMITS OF THE OVERLAY SHALL COVER ALL TRAVEL LANES AND WILL BEGIN AND END AT THE LIMITS OF THE ALL ROADWAY IMPROVEMENTS.

11. THE GUTTER DEPTH MAY BE USED TO ACCOUNT FOR THE DEPTH OF PARKING SPACE PROVIDED THERE IS A TWO FOOT GRASS STRIP BETWEEN THE BACK OF CURB AND THE FOUR FOOT WIDE SIDEWALK. IF SIDEWALK IS PLACED IMMEDIATELY ADJACENT TO THE BACK OF CURB AND THE GUTTER DEPTH IS USED FOR PARKING THE SIDEWALK SHALL BE INCREASED TO FIVE FEET WIDE. IN NO CASES SHALL THE GUTTER WIDTH BE COUNTED TOWARD THE WIDTH OF A PARKING SPACE.

12. JOINT SEAL SHALL BE PLACED ON THE BINDER LAYER IF THE WEARING SURFACE IS NOT APPLIED FOR 12 MONTHS.

13. SIDEWALK CROSS SLOPES SHALL BE 1% MINIMUM.

STANDARD DETAILS: STREETS	5.06
City of Auburn	
DEPARTMENT: ENGINEERING	REVISIONS:
SCALE: N.T.S.	03-01-2024
DRAWN BY: GINA McCRICKARD	
CITY ENGINEER: Alison Frazier	
APPVD. BY: Alison Frazier	
IMPLEMENTED: 01-01-2022	

DRIVEWAY / SIDEWALK WITHOUT GREENSPACE

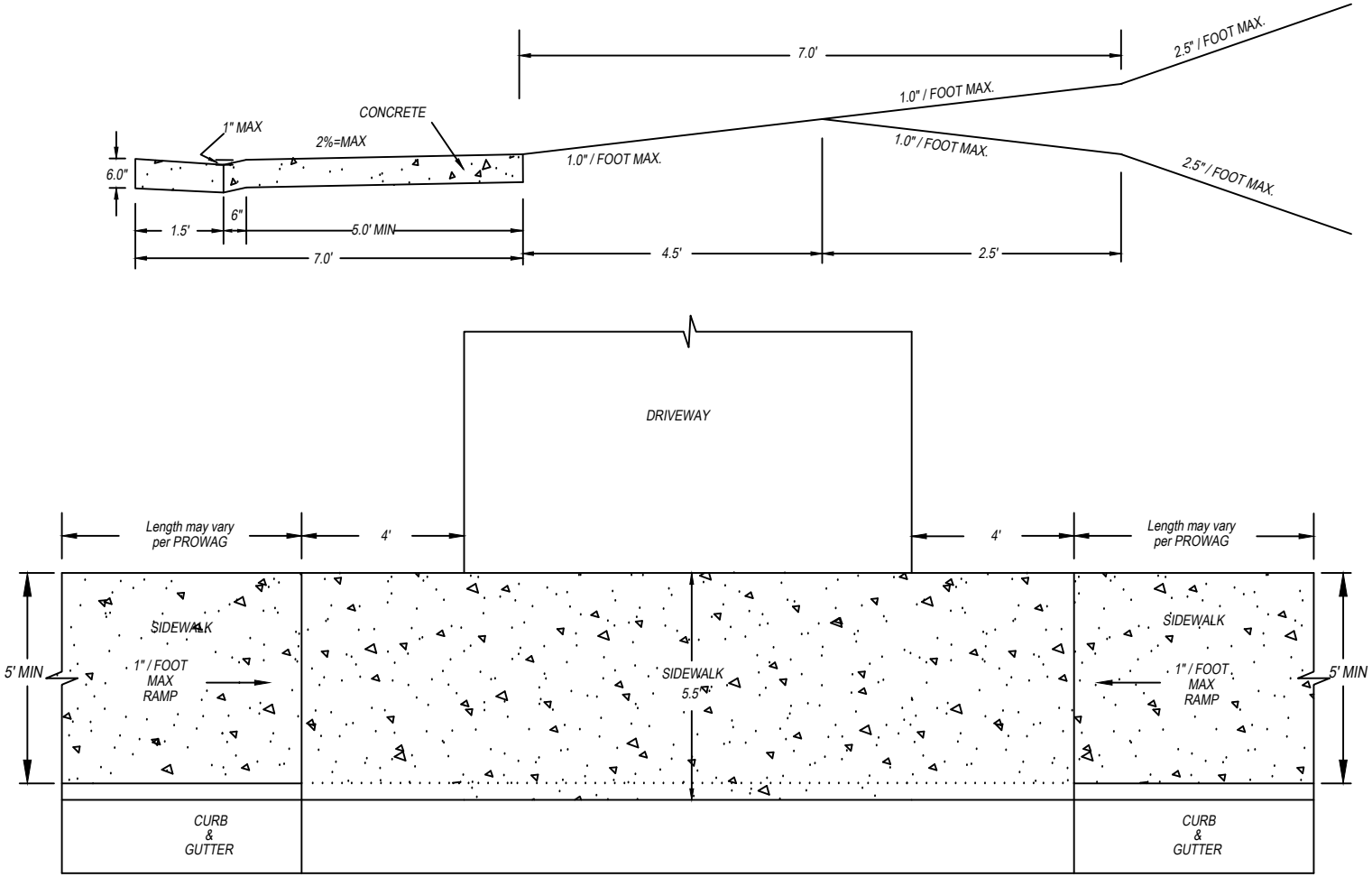

STANDARD DETAILS: STREETS	5.07
City of Auburn	
DEPARTMENT: ENGINEERING	REVISIONS:
SCALE: N.T.S.	
DRAWN BY: GINA McCRICKARD	
CITY ENGINEER: Alison Frazier	
APPVD. BY: Alison Frazier	
IMPLEMENTED: 01-01-2022	

STANDARD DRIVEWAY

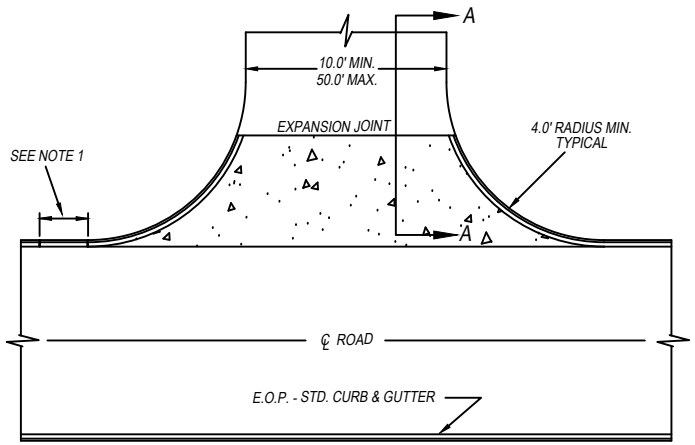

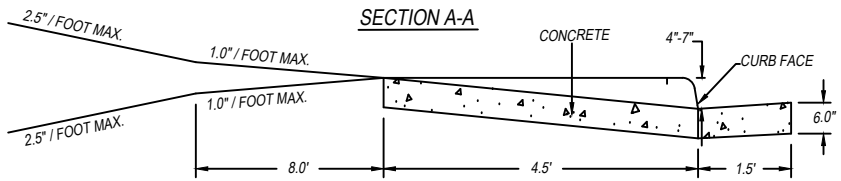

NOTES:

1. DISTANCE FROM RADIUS POINT TO EXISTING EXPANSION OR CONSTRUCTION JOINT SHALL BE AT LEAST 3'. IF THE DISTANCE IS LESS THAN 3.0', CURB & GUTTER SHALL BE REPLACED TO THE EXISTING JOINT.
2. EXPANSION JOINT TO BE PLACED AT TIE IN.
3. THE TEN FOOT MINIMUM WIDTH IS FOR RESIDENTIAL USES ON LOCAL STREETS, CUL-DE-SACS, AND ALLEYS. ALL OTHERS WILL BE TWELVE FOOT MINIMUM WIDTH. THE 50' WIDTH IS RESERVED FOR COMMERCIAL AND MULTI UNIT RESIDENTIAL DEVELOPMENTS.(FOR ALL OTHER RESIDENTIAL USES THE MAXIMUM DRIVEWAY WIDTH SHALL BE 24'. (See section 5.2.6 in the Engineering Design and Construction Manual for further guidance.)
4. DRIVEWAY TURNOUT WIDTHS ARE MEASURED AT THE RIGHT OF WAY.
5. REMOVE CURB & GUTTER FOR DRIVEWAY TURNOUT PLACEMENT. SAW CUTTING IS PERMITTED ALONG THE CURB LINE / GUTTER TO MAINTAIN EXISTING GUTTER.
6. ALL CONCRETE SHALL BE A MINIMUM OF SIX INCHES THICK.
7. RADII FOR USES OTHER THAN RESIDENTIAL MUST BE TWENTY-FIVE FOOT, MINIMUM.
8. ON STREETS WITH SIDEWALK CONCRETE DRIVEWAY TURNOUT MUST EXTEND TO THE BACK EDGE OF THE SIDEWALK.
9. CONCRETE DRIVEWAY TURNOUT MUST MEET CITY STANDARDS OR CAN BE DESIGNED TO SITE SPECIFIC CONDITIONS.
10. IF ON A NON-CURB AND GUTTER STREET AN ASPHALT APRON MAY BE UTILIZED.

STANDARD DETAILS: STREETS	5.08
City of Auburn	
DEPARTMENT: ENGINEERING	REVISIONS:
SCALE: N.T.S.	03-01-2024
DRAWN BY: GINA McCRICKARD	
CITY ENGINEER: Alison Frazier	
APPVD. BY: Alison Frazier	
IMPLEMENTED: 01-01-2022	

PARKING PLAN - 60° PARKING

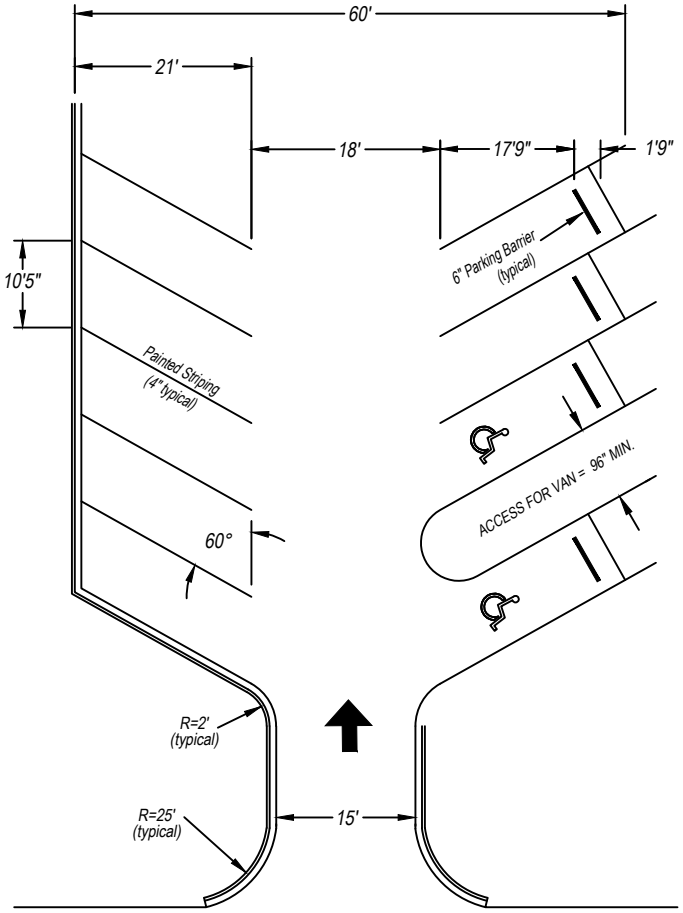

NOTE: ALLOW 3'9" FOR REAR OVERHANG.

PARKING PLAN - 45° PARKING

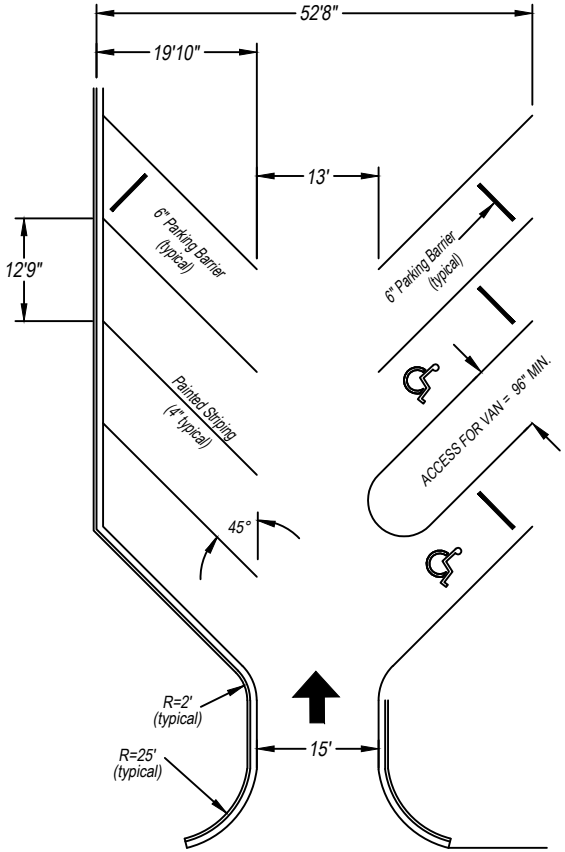

NOTE: ALLOW 3'3" FOR REAR OVERHANG.

STANDARD DETAILS: STREETS	5.09
City of Auburn	
DEPARTMENT: ENGINEERING	REVISIONS:
SCALE: N.T.S.	
DRAWN BY: GINA McCRICKARD	
CITY ENGINEER: Alison Frazier	
APPVD. BY: Alison Frazier	
IMPLEMENTED: 01-01-2022	

PARKING PLAN - 90° PARKING

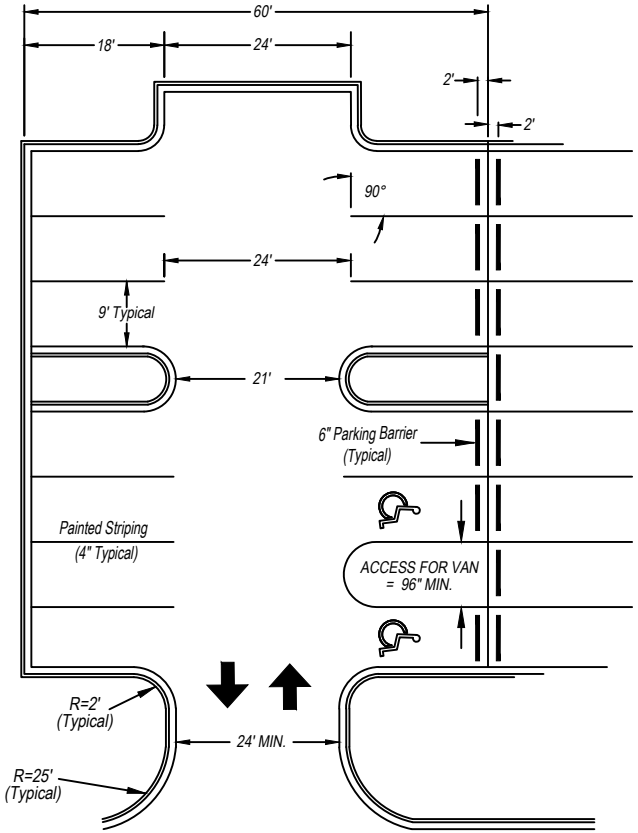

NOTE: ALLOW 4' FOR REAR OVERHANG.

PARKING PLAN - PARALLEL PARKING

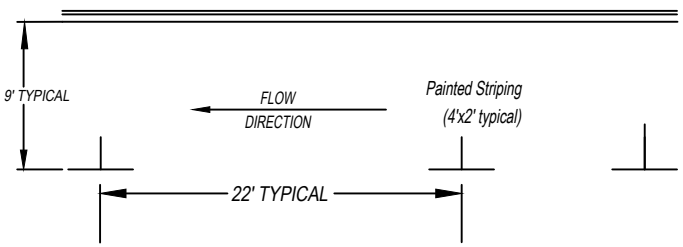

STANDARD DETAILS: STREETS	5.10
City of Auburn	
DEPARTMENT: ENGINEERING	REVISIONS:
SCALE: N.T.S.	
DRAWN BY: GINA McCRICKARD	
CITY ENGINEER: Alison Frazier	
APPVD. BY: Alison Frazier	
IMPLEMENTED: 01-01-2022	

ACCESSIBLE PARKING

Features of Accessible Parking Spaces for Cars

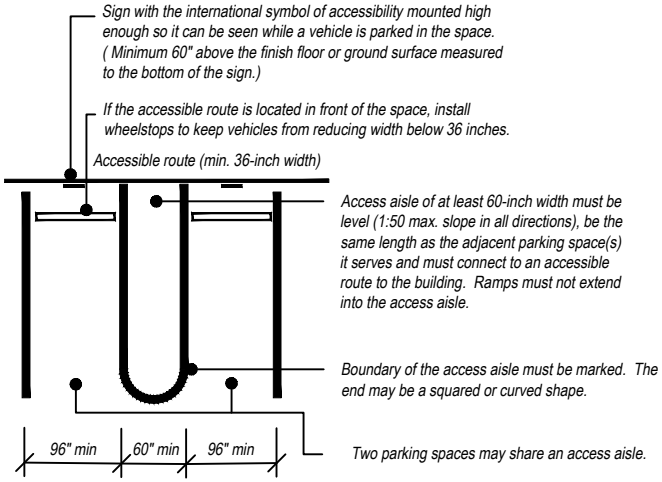

Three Additional Features for Van-Accessible Parking Spaces

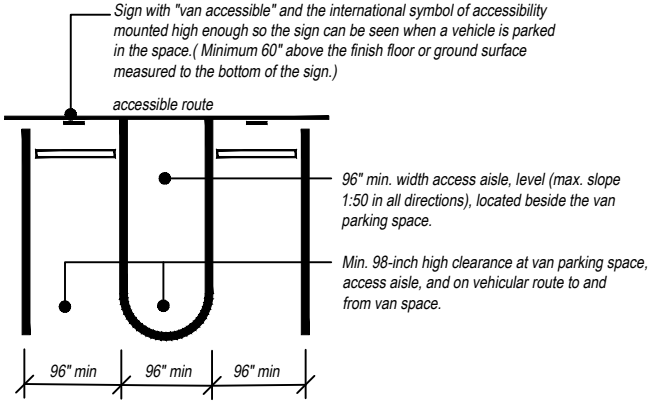

ACCESSIBLE PARKING SPACES	
TOTAL PARKING SPACES PROVIDED	REQUIRED MINIMUM NUMBER OF ACCESSIBLE SPACES
1 to 25	1
26 to 50	2
51 to 75	3
76 to 100	4
101 to 150	5
151 to 200	6
201 to 300	7
301 to 400	8
401 to 500	9
501 to 1,000	2% of total
501 to 1,000	20, plus one for each 100 over 1,000

Where parking is provided, accessible parking spaces shall be provided in accordance with this table.

REFERENCE:
INTERNATIONAL BUILDING CODE, LATEST EDITION.

STANDARD DETAILS: STREETS	5.11
City of Auburn	
DEPARTMENT: ENGINEERING	REVISIONS:
SCALE: N.T.S.	
DRAWN BY: GINA McCRICKARD	
CITY ENGINEER: Alison Frazier	
APPVD. BY: Alison Frazier	
IMPLEMENTED: 01-01-2022	

HANDICAP RAMP

DOWN TOWN USE

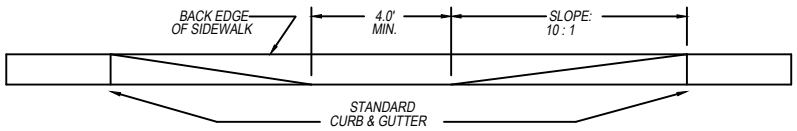

SECTION C

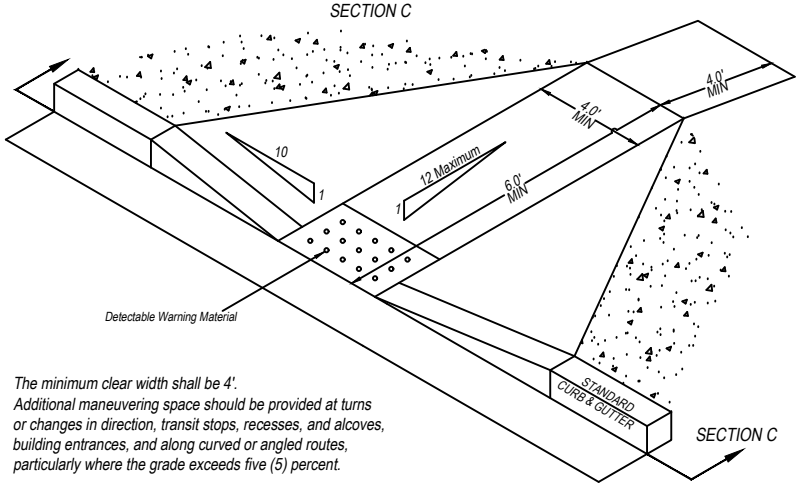

The minimum clear width shall be 4'.
Additional maneuvering space should be provided at turns or changes in direction, transit stops, recesses, and alcoves, building entrances, and along curved or angled routes, particularly where the grade exceeds five (5) percent.

HANDICAP RAMP

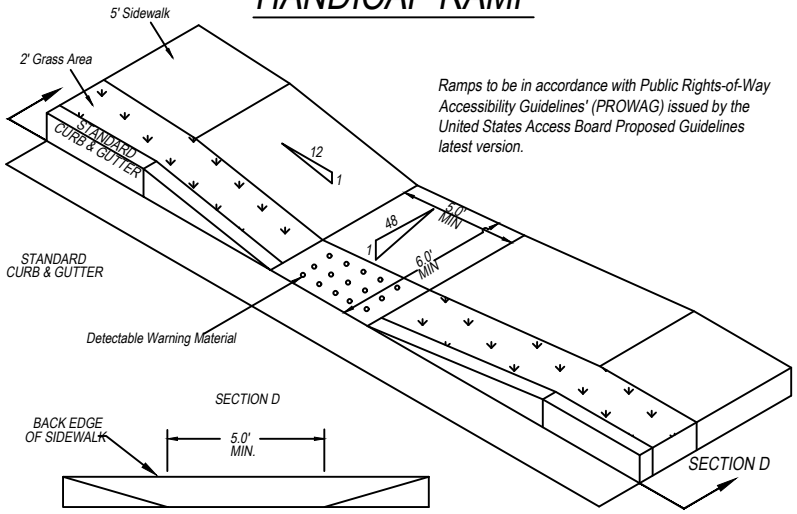

Ramps to be in accordance with Public Rights-of-Way Accessibility Guidelines' (PROWAG) issued by the United States Access Board Proposed Guidelines latest version.

DETECTABLE WARNING AT HANDICAP RAMP

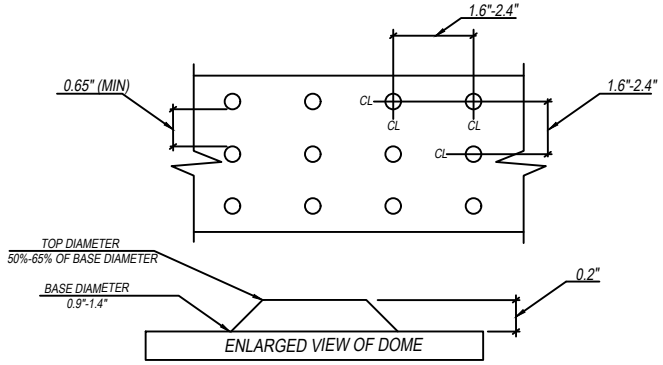

NOTES:

1. DETECTABLE WARNINGS SHALL CONSIST OF A SURFACE OF TRUNCATED DOMES AND SHALL COMPLY WITH APPLICABLE ADA REGULATIONS.
2. DOME SIZE: TRUNCATED DOMES IN A DETECTABLE WARNING SURFACE SHALL HAVE A BASE DIAMETER OF 0.9 INCH MINIMUM TO 1.4 INCHES MAXIMUM, A TOP DIAMETER OF 50 PERCENT OF THE BASE DIAMETER MINIMUM TO 65 PERCENT OF THE BASE DIAMETER MAXIMUM, AND HEIGHT OF 0.2 INCH
3. DOME SPACING: TRUNCATED DOMES IN A DETECTABLE WARNING SURFACE SHALL HAVE A CENTER-TO-CENTER SPACING OF 1.6 INCHES MINIMUM AND 2.4 INCHES MAXIMUM, AND A BASE-TO-BASE SPACING OF 0.65 INCH MINIMUM, MEASURED BETWEEN THE MOST ADJACENT DOMES.
4. CONTRAST: DETECTABLE WARNING SURFACES SHALL CONTRAST VISUALLY WITH ADJACENT GUTTER, STREET OR HIGHWAY, OR WALKWAY SURFACE EITHER LIGHT-ON-DARK, OR DARK-ON-LIGHT.
5. SIZE: DETECTABLE WARNING SURFACES SHALL EXTEND 24 INCHES MINIMUM IN THE DIRECTION OF TRAVEL AND THE FULL WIDTH OF THE CURB RAMP (EXCLUSIVE OF FLARES), THE LANDING, OR THE BLENDED TRANSITION.

STANDARD DETAILS: STREETS	5.12
City of Auburn	
DEPARTMENT: ENGINEERING	REVISIONS:
SCALE: N.T.S.	03-01-2024
DRAWN BY: GINA McCRICKARD	
CITY ENGINEER: Alison Frazier	
APPVD. BY: Alison Frazier	
IMPLEMENTED: 01-01-2022	

MOUNTABLE ISLAND NOSE

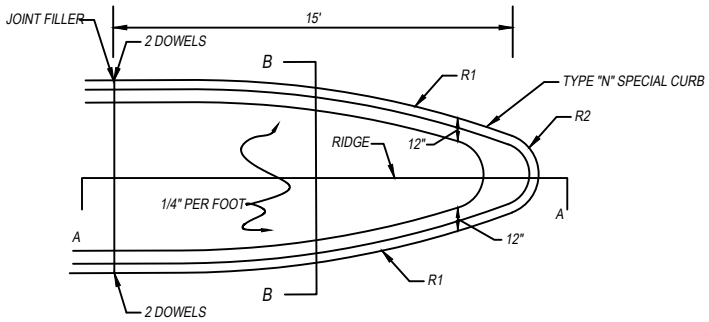

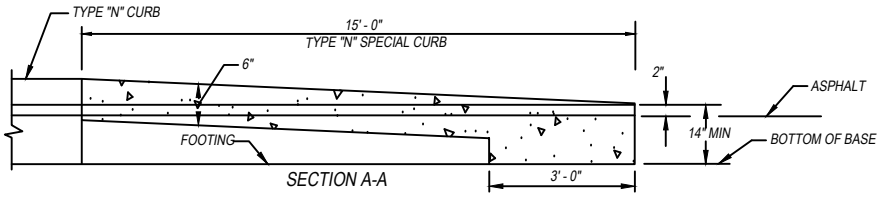

SECTION A-A

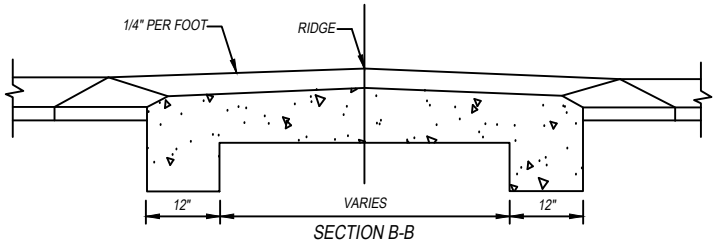

SECTION B-B

NOTES:
1. R1 = TURNING SPEED RADIUS: 20 MPH = 90', 25 MPH = 150', 30 MPH = 230'. R1 SHALL BE A MINIMUM OF 80'.
2. R2 = 1/2 MEDIAN WIDTH (MAXIMUM) BUT ACCEPTABLE WHEN R2 IS APPROXIMATELY 1/5 OF MEDIAN WIDTH.

RIGHT IN RIGHT OUT DETAIL

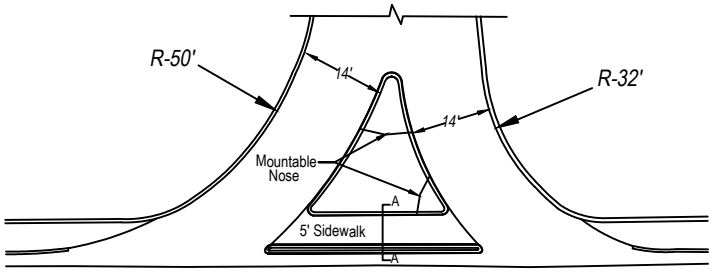

RIGHT IN RIGHT OUT DETAIL

Detail A-A

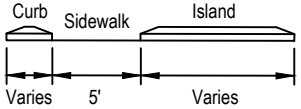

STANDARD DETAILS: STREETS	5.13
DEPARTMENT: ENGINEERING	REVISIONS:
SCALE: N.T.S.	
DRAWN BY: GINA McCRICKARD	
CITY ENGINEER: Alison Frazier	
APPVD. BY: Alison Frazier	
IMPLEMENTED: 01-01-2022	

City of Auburn

SIDEWALK GUARDRAIL DETAIL

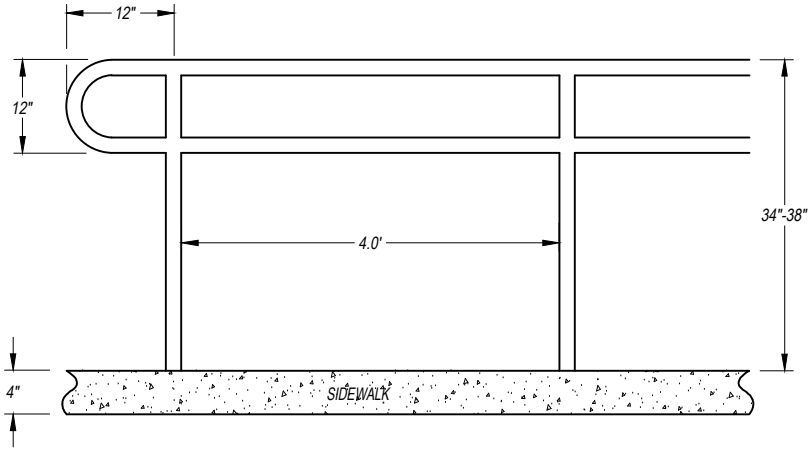

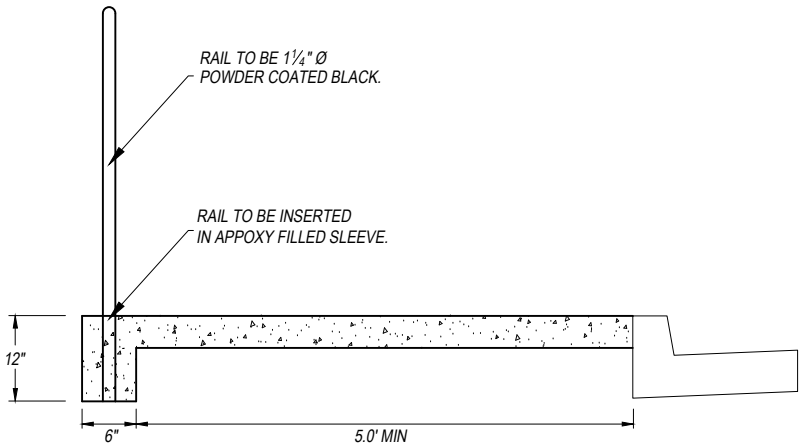

RIGHT ALT. VIEW

ROADWAY FLARE AT HYDRANT

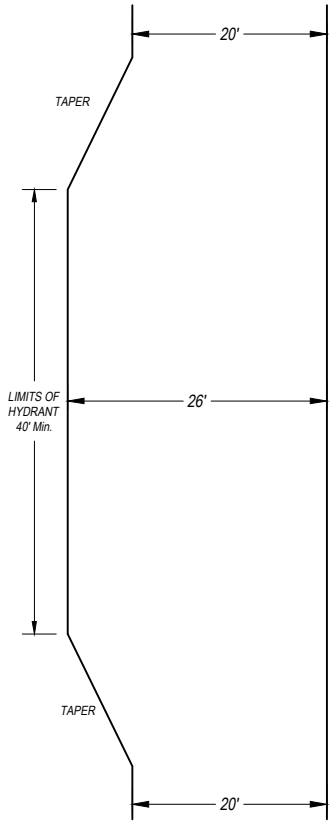

When a fire hydrant is located on a fire apparatus access road, the minimum road width shall be 26 feet from EP - EP for non curb and gutter streets, exclusive of shoulders, or from face of curb - face of curb for curb and gutter streets, for at least 40 feet at the hydrant.

STANDARD DETAILS: STREETS	5.14
City of Auburn	
DEPARTMENT: ENGINEERING	REVISIONS:
SCALE: N.T.S.	03-01-2024
DRAWN BY: GINA McCRICKARD	
CITY ENGINEER: Alison Frazier	
APPVD. BY: Alison Frazier	
IMPLEMENTED: 01-01-2022	

JACK & BORE DETAIL

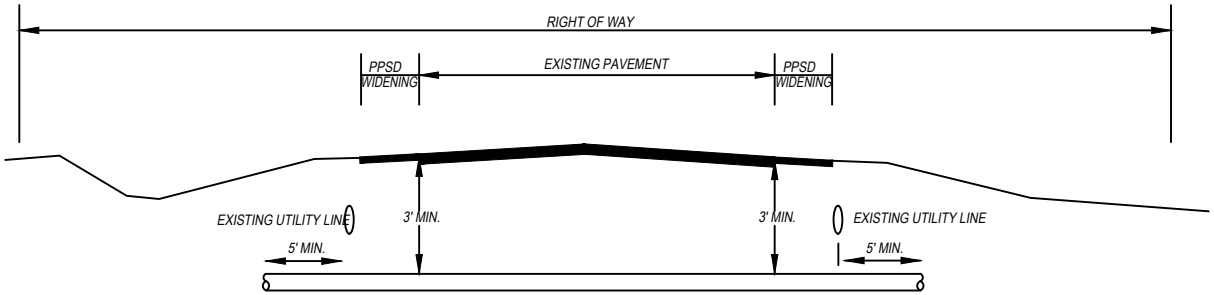

NOTES:
1. CASING SHOULD EXTEND AT LEAST 5' BEYOND EXISTING UTILITIES OR EDGE OF PAVEMENT, WHICHEVER IS GREATER.
2. IF WIDENING PLANS EXIST FOR THE ROADWAY TO BE BORED, ADDITIONAL CASING LENGTH MAY BE REQUIRED.
3. SPECIFIC INFORMATION ON BORING UNDER ROADWAYS IS FOUND IN THE PUBLIC WORKS DESIGN AND CONSTRUCTION MANUAL.
4. FOR WATER MAINS LOCATED WITHIN THE ENCASEMENT, THE MAIN SHALL DEFLECT IMMEDIATELY AFTER EXITING THE ENCASEMENT USING TWO 45-DEGREE BENDS TO ALLOW FOR FUTURE MAINTENANCE ON THE MAIN.

ENCASEMENT SIZING
WATER AND SANITARY SEWER

CARRIER PIPE		SPACER	STEEL ENCASEMENT	
NOMINAL PIPE DIAMETER	STANDARD PIPE BELL O.D.	CASING SPACER BAND WIDTH	MINIMUM CASING THICKNESS	MINIMUM CASING DIAMETER
4	6.40	8	0.25	14
6	8.60	8	0.25	16
8	11.16	8	0.25	18
10	13.25	8	0.25	20
12	15.22	8	0.25	22
14	17.73	12	0.25	24
16	19.86	12	0.3125	26
18	22.16	12	0.3125	30
20	24.28	12	0.3125	32
24	28.50	12	0.3125	36
30	34.95	12	0.5	42
36	41.37	12	0.5	48

ALL SIZES INDICATED ARE IN INCHES.

*CASING DIAMETERS BASED ON BEING A MINIMUM OF 6 INCHES GREATER THAN THE OUTER DIAMETER OF THE JOINT BELL, TO THE NEAREST EVEN SIZE.

PIPE UNDERDRAIN W/CURB & GUTTER

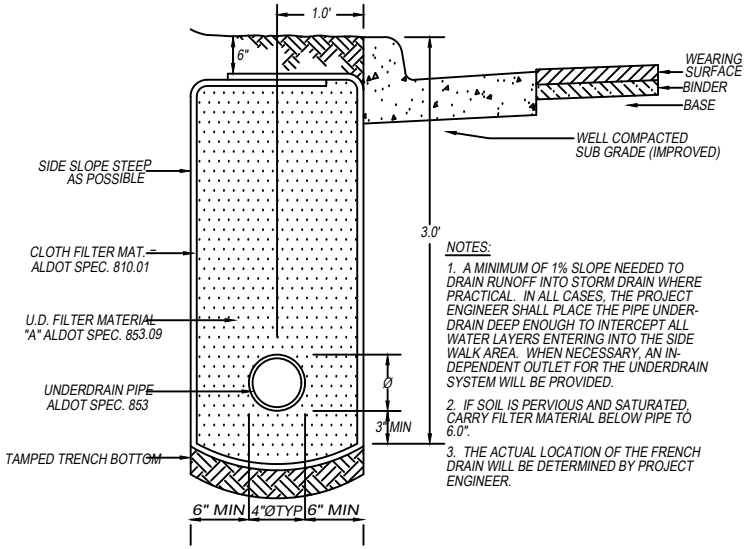

NOTES:

1. A MINIMUM OF 1% SLOPE NEEDED TO DRAIN RUNOFF INTO STORM DRAIN WHERE PRACTICAL. IN ALL CASES, THE PROJECT ENGINEER SHALL PLACE THE PIPE UNDER-DRAIN DEEP ENOUGH TO INTERCEPT ALL WATER LAYERS ENTERING INTO THE SIDE WALK AREA. WHEN NECESSARY, AN IN-DEPENDENT OUTLET FOR THE UNDERDRAIN SYSTEM WILL BE PROVIDED.
2. IF SOIL IS PERVIOUS AND SATURATED, CARRY FILTER MATERIAL BELOW PIPE TO 6.0".
3. THE ACTUAL LOCATION OF THE FRENCH DRAIN WILL BE DETERMINED BY PROJECT ENGINEER.

STANDARD DETAILS: STREETS	5.15
City of Auburn	
DEPARTMENT: ENGINEERING	REVISIONS:
SCALE: N.T.S.	
DRAWN BY: GINA McCRICKARD	
CITY ENGINEER: Alison Frazier	
APPVD. BY: Alison Frazier	
IMPLEMENTED: 01-01-2022	

TEMPORARY UTILITY PATCH DETAIL

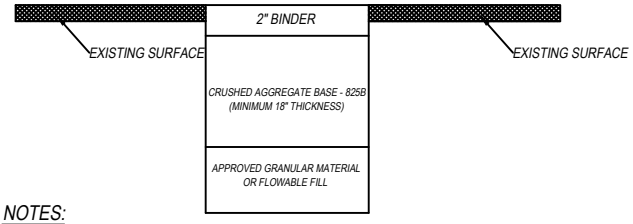

NOTES:

1. EDGES SHALL BE SAW CUT, VERTICAL AND SMOOTH OR JACK HAMMERED AND COATED WITH TACK.
2. 2" OF ASPHALT MUST BE PLACED IMMEDIATELY FOLLOWING WORK AND BE IN PLACE AT LEAST EIGHT WEEKS PRIOR TO PLACING THE FINAL PATCH.
3. ASPHALT AND CRUSHED AGGREGATE BASE MATERIALS SHALL BE IN ACCORDANCE WITH ALDOT STANDARD SPECIFICATIONS FOR HIGHWAY CONSTRUCTION.
4. APPROVED GRANULAR MATERIAL AND 825B TO BE COMPACTED IN EIGHT (8") LIFTS.
5. FLOWABLE FILL MUST BE PRE-APPROVED.

PERMANENT UTILITY PATCH DETAIL

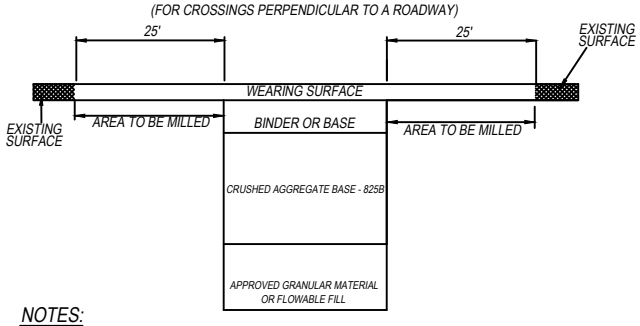

NOTES:

1. PERMANENT PATCH MUST BE PLACED 25' EACH SIDE OF TRENCH FOLLOWING THE EIGHT WEEK TIME. ALL TEMPORARY ASPHALT MUST BE REMOVED. ANY DEVIATION TO THIS SEQUENCE MUST BE APPROVED BY THE CITY ENGINEER. MILLING IS REQUIRED ALONG ALL EDGES AND THE OVERLAY TO MATCH ADJACENT CONDITIONS.
2. FOR FOUR (4) LANE ROADWAYS, THE OVERLAY SHOULD EXTEND TO THE NEAREST LANE. MILLING IS REQUIRED ALONG ALL EDGES OF PAVEMENT.
3. ASPHALT AND CRUSHED AGGREGATE BASE MATERIALS SHALL BE IN ACCORDANCE WITH ALDOT
4. FOR UTILITY PATCHES RUNNING PARALLEL TO THE ROADWAY, PATCHING SHALL BE THE FULL WIDTH OF THE ROAD.
5. IF THE FULL 25' PATCH IS WAIVED BY THE CITY ENGINEER BASED ON THE EXISTING ROADWAY CONDITIONS, THE PERMANENT PATCH SHALL EXTEND ONE (1') FOOT ON EITHER SIDE OF THE TRENCH.
6. EDGES SHALL BE SAW CUT, VERTICAL AND SMOOTH OR JACK HAMMERED AND COATED WITH TACK.

	0 TO 2,000 VPD		2,001 TO 5,000 VPD		5,001 AND GREATER	
CLASSIFICATION	ALLEY/CUL-DE-SAC LOCAL RESIDENTIAL		RESIDENTIAL COLLECTOR		COLLECTOR/ARTERIAL LOCAL COMMERCIAL	
	CLASS II		CLASS III		CLASS IV	
	FULL DEPTH	ASPHALT/BASE	FULL DEPTH	ASPHALT/BASE	FULL DEPTH	ASPHALT/BASE
WEARING SURFACE (424A)	1"	1"	2"	1"	2"	1"
BINDER (424B) OR BASE (424C)	* 4"	2"	* 5"	* 4"	* 6"	* 4"
CRUSHED AGGREGATE BASE 825B		6"		6"		* 9"

NOTES: MIXES SHALL COMPLY WITH THE LATEST EDITION OF THE ALABAMA DEPARTMENT OF TRANSPORTATION STANDARD SPECIFICATIONS.
* BINDER OR BASE LAYER TO BE PLACED IN TWO EQUAL LIFTS.

STANDARD DETAILS: STREETS | 5.16

City of Auburn

DEPARTMENT: ENGINEERING	REVISIONS:
SCALE: N.T.S.	
DRAWN BY: GINA McCRICKARD	
CITY ENGINEER: Alison Frazier	
APPVD. BY: Alison Frazier	
IMPLEMENTED: 01-01-2022	

MULTI USE PATH FOR TWO-WAY SHARED ON SEPARATED RIGHT-OF-WAY

ASPHALT SIDEWALK AND TRAILS

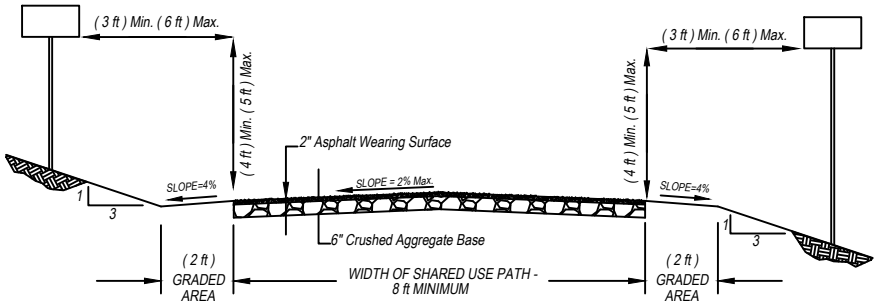

CONCRETE SIDEWALK AND TRAILS

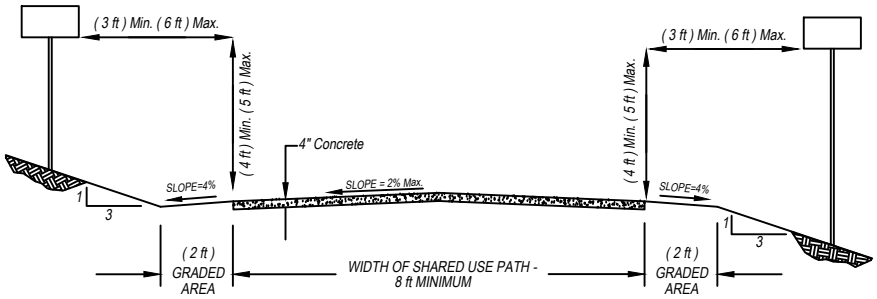

MULTI USE PATH CONFIGURATIONS				
	PRIMARY PATH WIDTH	PRIMARY PATH DEPTH	SECONDARY PATH WIDTH	SECONDARY PATH DEPTH
ASPHALT	12.0'	2.0"/6.0"	8.0'	2.0"/6.0"
CONCRETE	12.0'	6.0"	8.0'	4.0"

AASHTO, GUIDE FOR THE DEVELOPMENT OF BICYCLE FACILITIES

STANDARD DETAILS: STREETS	5.17
City of Auburn	
DEPARTMENT: ENGINEERING	REVISIONS:
SCALE: N.T.S.	
DRAWN BY: GINA McCRICKARD	
CITY ENGINEER: Alison Frazier	
APPVD. BY: Alison Frazier	
IMPLEMENTED: 01-01-2022	

NOTES:
1. TURNOUT TO BE 6" CONCRETE WITH 6" CRUSHED AGGREGATE BASE.
2. REMOVE EXISTING CURB AND GUTTER ALONG COMPLETE LENGTH OF TURNOUT.
3. SLOPE TURNOUT TOWARD STREET FOR POSITIVE DRAINAGE.

BUS TURNOUT

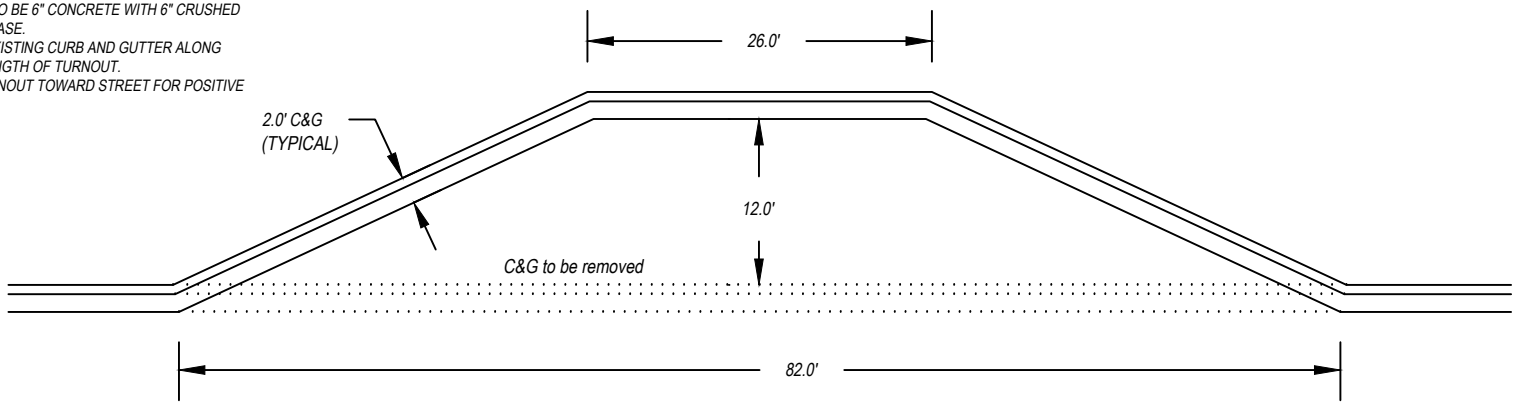

BUS TURNOUT DETAIL PAINTED

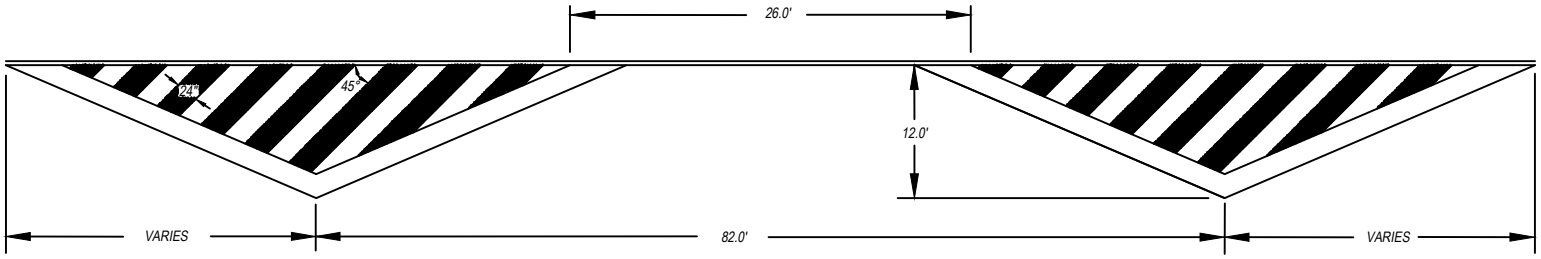

STANDARD DETAILS: STREETS	5.18
DEPARTMENT: ENGINEERING	REVISIONS:
SCALE: N.T.S.	
DRAWN BY: GINA McCRICKARD	
CITY ENGINEER: Alison Frazier	
APPVD. BY: Alison Frazier	
IMPLEMENTED: 01-01-2022	

City of Auburn

SILVA CELL

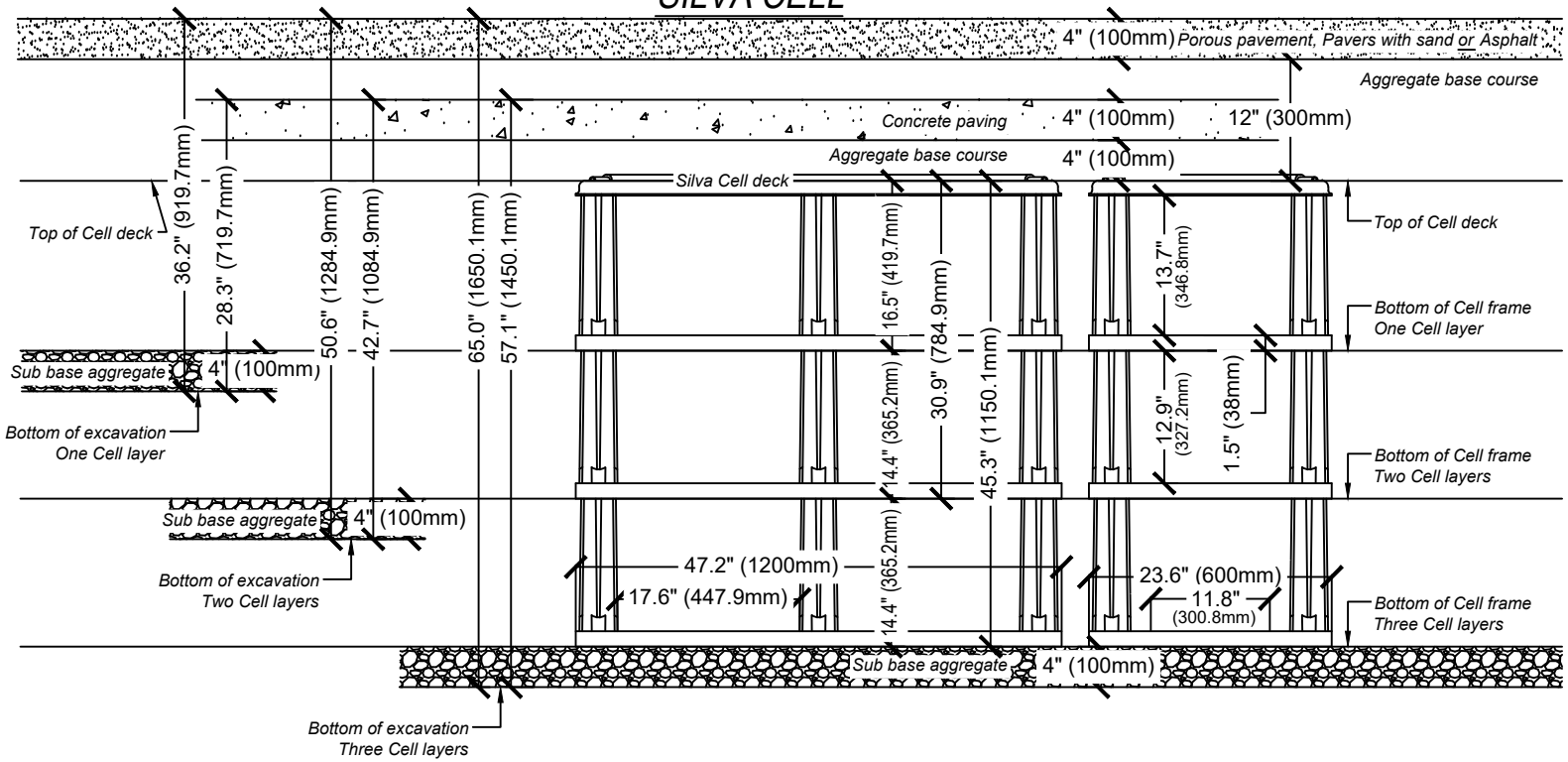

This detail shall be used in conjunction with Silva Cells for Trees Details and Specifications.

The above information contained in this standard detail is not to scale.

The standard detail is provided for general education and informational purposes only and does not constitute an endorsement, approval or recommendation of any kind. The actual suitability and applicability of this information for a given use depends upon a wide variety of considerations, including specific project specifications, over which DeepRoot® has no information or control. This standard detail should NOT be used as a basis for volume calculations that are site specific and vary greatly depending on cell and deck spacing, soil conditions and soil compaction. All DeepRoot® Silva Cell products are sold with the understanding that the purchaser, either individually or in consultation with purchaser's design professionals, has independently determined the suitability of each product for the application for which it is purchased. Except as expressly provided, DeepRoot® disclaims all warranties, express or implied, and strongly encourages the reader to consult with a construction/design professional and/or engineer before applying any of this information to a specific use or purpose.

Contractor shall resolve utility conflicts using the manufacturers recommended utility conflict details.

Deep Root Partners L.P.
530 Washington Street
San Francisco, California 94111
Ph. 415 781-9700
www.deeproot.com

Copyright © 2010 Deep Root Partners, L.P.

STANDARD DETAILS: STREETS	5.19
City of Auburn	
DEPARTMENT: ENGINEERING	REVISIONS:
SCALE: N.T.S.	
DRAWN BY: GINA McCRICKARD	
CITY ENGINEER: Alison Frazier	
APPVD. BY: Alison Frazier	
IMPLEMENTED: 01-01-2022	

TREE GRATE

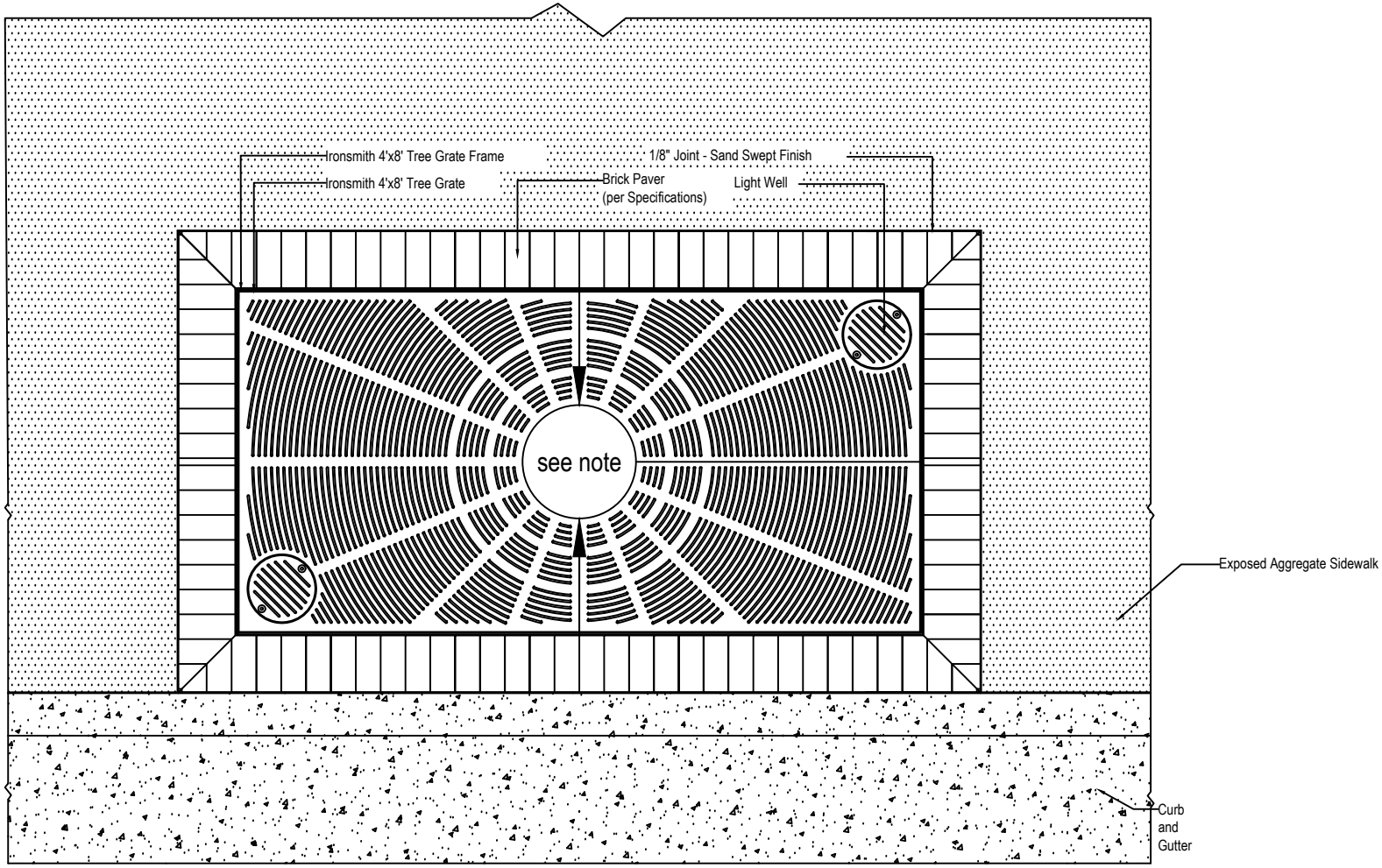

TREE GRATE #M9628
STYLE: OLYMPIAN

NOTE:
1. BRICK PAVER COLOR- PINE HALL BRICK ENGLISH EDGE FULL RANGE, OR APPROVED EQUAL.

STANDARD DETAILS: STREETS	5.20
City of Auburn	
DEPARTMENT: ENGINEERING	REVISIONS:
SCALE: N.T.S.	
DRAWN BY: GINA McCRICKARD	
CITY ENGINEER: Alison Frazier	
APPVD. BY: Alison Frazier	
IMPLEMENTED: 01-01-2022	

TREE GRATE

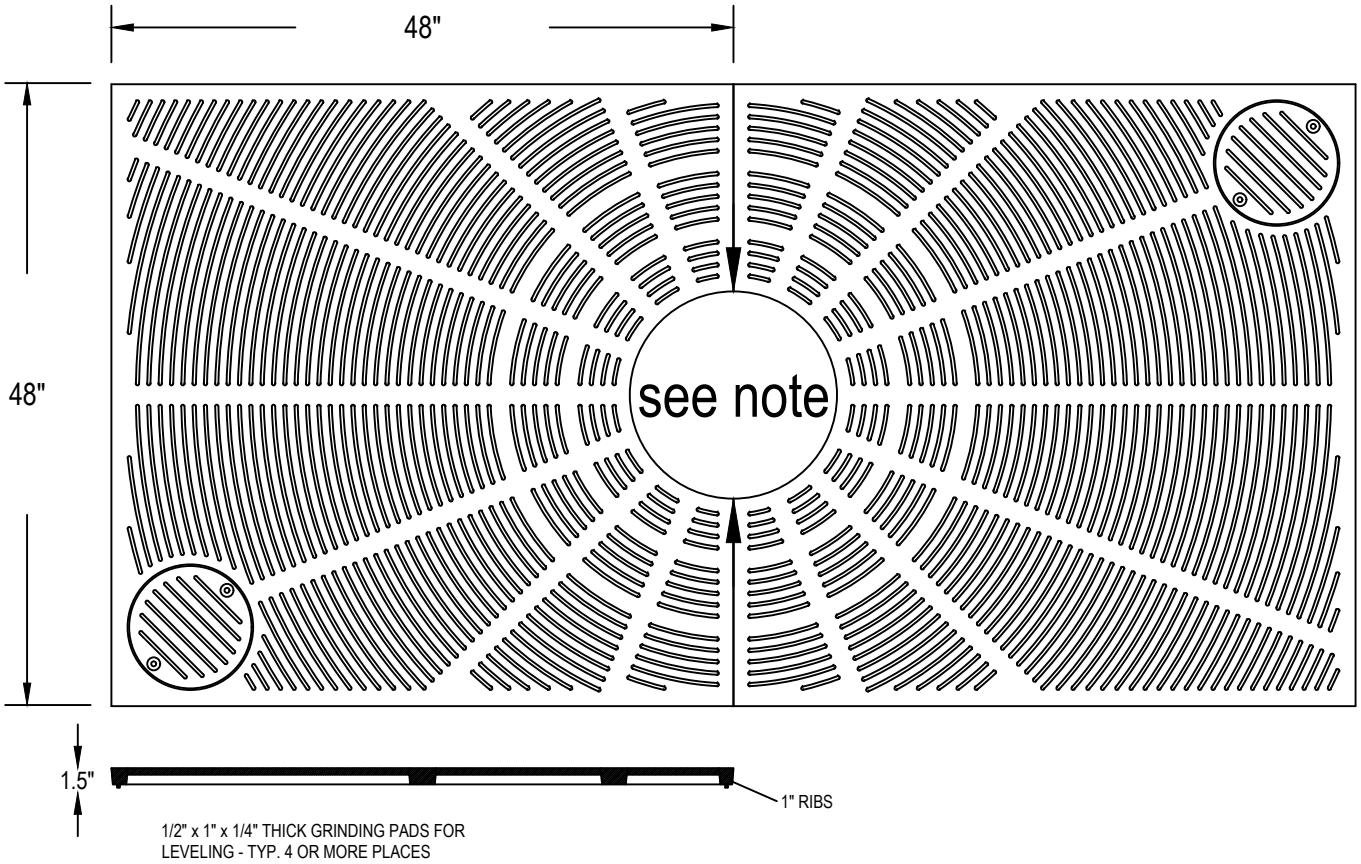

SLOT WIDTH IS 1/4" MAXIMUM, MEETS ADA COMPLIANCE.
GRATE CAST FROM GRAY IRON
TREE OPENING SIZE TO BE 16"
STEEL ANGLE FRAME REQUIRED
FOR INSTALLATION USE MODEL M48X96F
OUTER FRAME DIM. IS 3/4" ± 1/8"
GREATER THAN GRATE.

STANDARD DETAILS: STREETS	5.21
City of Auburn	
DEPARTMENT: ENGINEERING	REVISIONS:
SCALE: N.T.S.	
DRAWN BY: GINA McCRICKARD	
CITY ENGINEER: Alison Frazier	
APPVD. BY: Alison Frazier	
IMPLEMENTED: 01-01-2022	

TREE GRATE

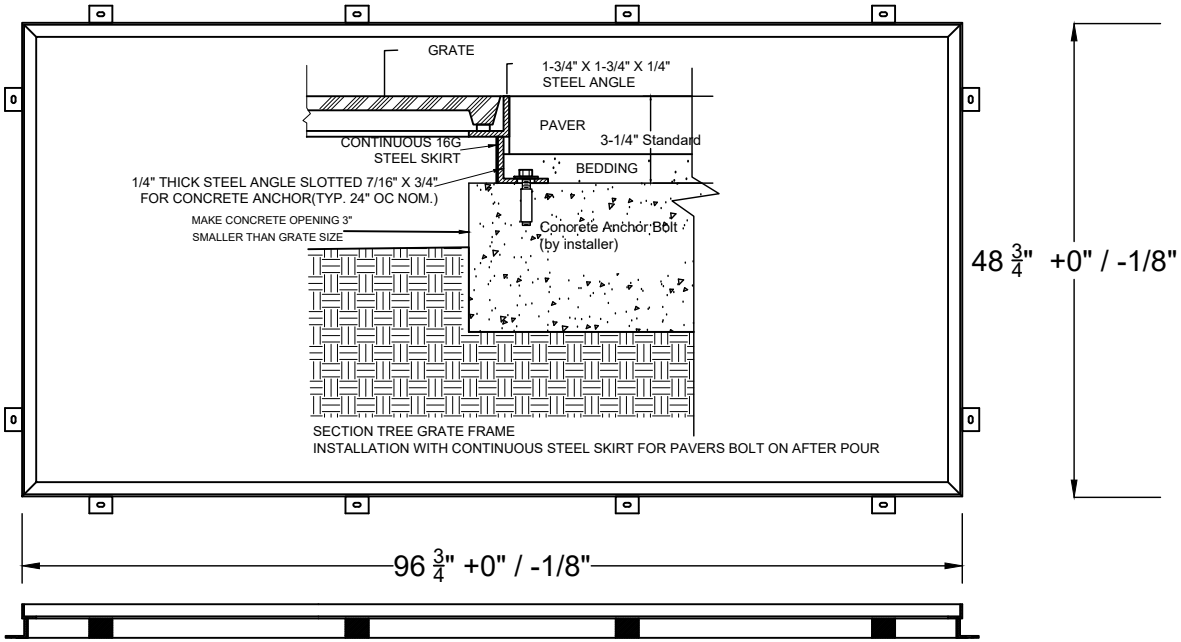

RECTANGULAR
TREE GRATE FRAME
M48X96F -6

WITH DEAIL #6
BOLT IN INSTALLATION WITH
CONTINOUS STEEL SKIRT

ANCHORS : CONCRETE
ANCHOR BOLT BY
INSTALLER.

FRAME JIG WELDED FROM
1-3/4" x 1-3/4" x 1/4" STEEL
ANGLE PER ASTM A36

FRAME FINISH:
POWDER COAT-BLACK

OTHER INSTALLATION
CONFIGURATIONS
AVAILABLE

IRONSMITH
41-701 CORPORATE WAY, #3
PALM DESERT, CA 92260
(800) 338-4766

© COPYRIGHT

This drawing embodies a confidential proprietary design of IRONSMITH Palm Desert, CA. All design, manufacturing, reproduction, use, sale, and other rights regarding the same are expressly reserved. This drawing is submitted under confidential relationship for a specific purpose and the recipient agrees by accepting this drawing not to supply or disclose any information regarding it to any unauthorized person or to incorporate any special feature peculiar to this design in other projects. The information disclosed in this drawing may be covered completely or in part by patents pending. Designers may incorporate this drawing in their plans for the purpose of showing design intent. This drawing is not to be used for the purpose of product production.

STANDARD DETAILS: STREETS	5.22
City of Auburn	
DEPARTMENT: ENGINEERING	REVISIONS:
SCALE: N.T.S.	
DRAWN BY: GINA McCRICKARD	
CITY ENGINEER: Alison Frazier	
APPVD. BY: Alison Frazier	
IMPLEMENTED: 01-01-2022	

TREE WELL AND GRATE

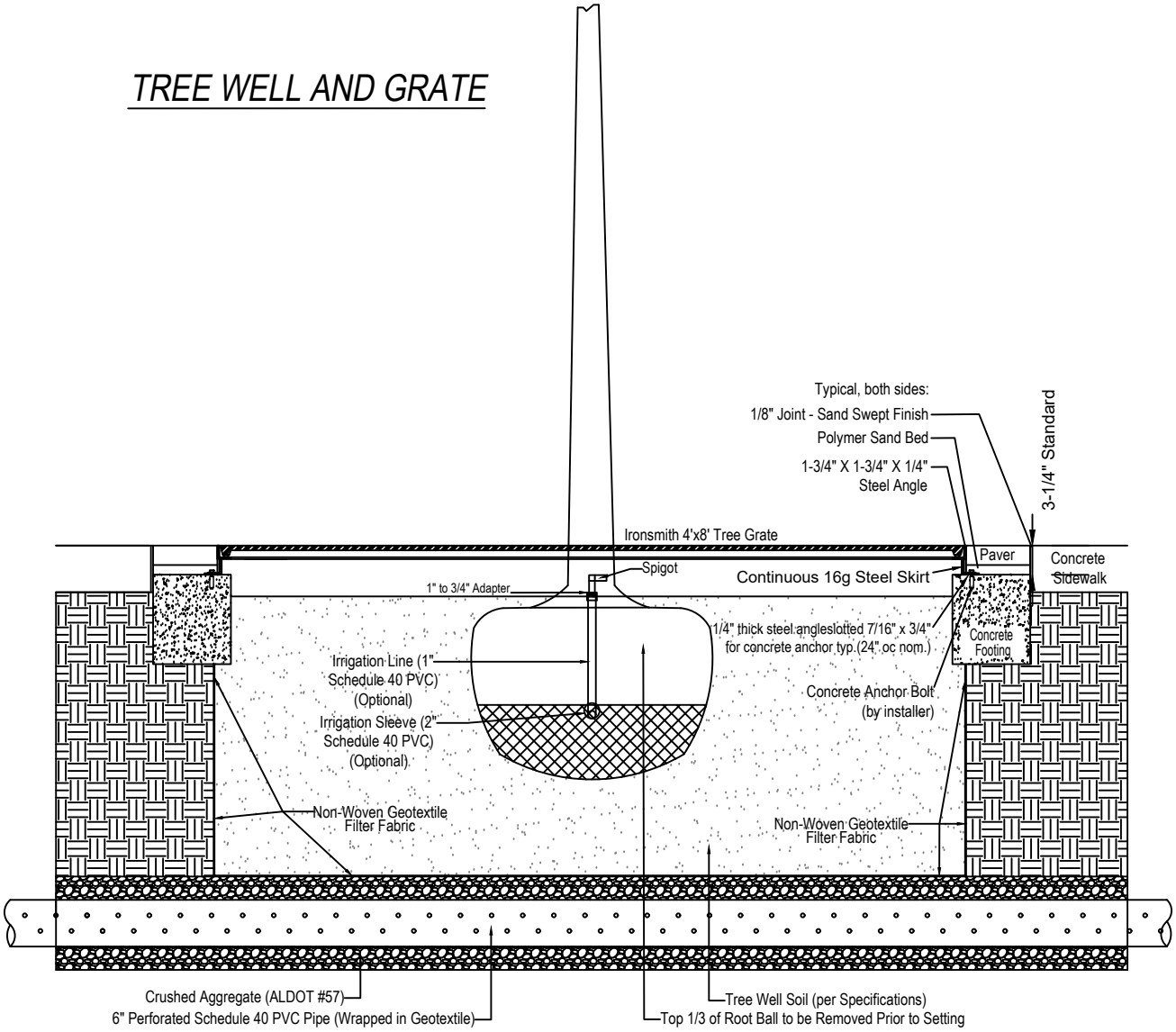

STANDARD DETAILS: STREETS	5.23
City of Auburn	
DEPARTMENT: ENGINEERING	REVISIONS:
SCALE: N.T.S.	
DRAWN BY: GINA McCRICKARD	
CITY ENGINEER: Alison Frazier	
APPVD. BY: Alison Frazier	
IMPLEMENTED: 01-01-2022	

TREE WELL AND GRATE

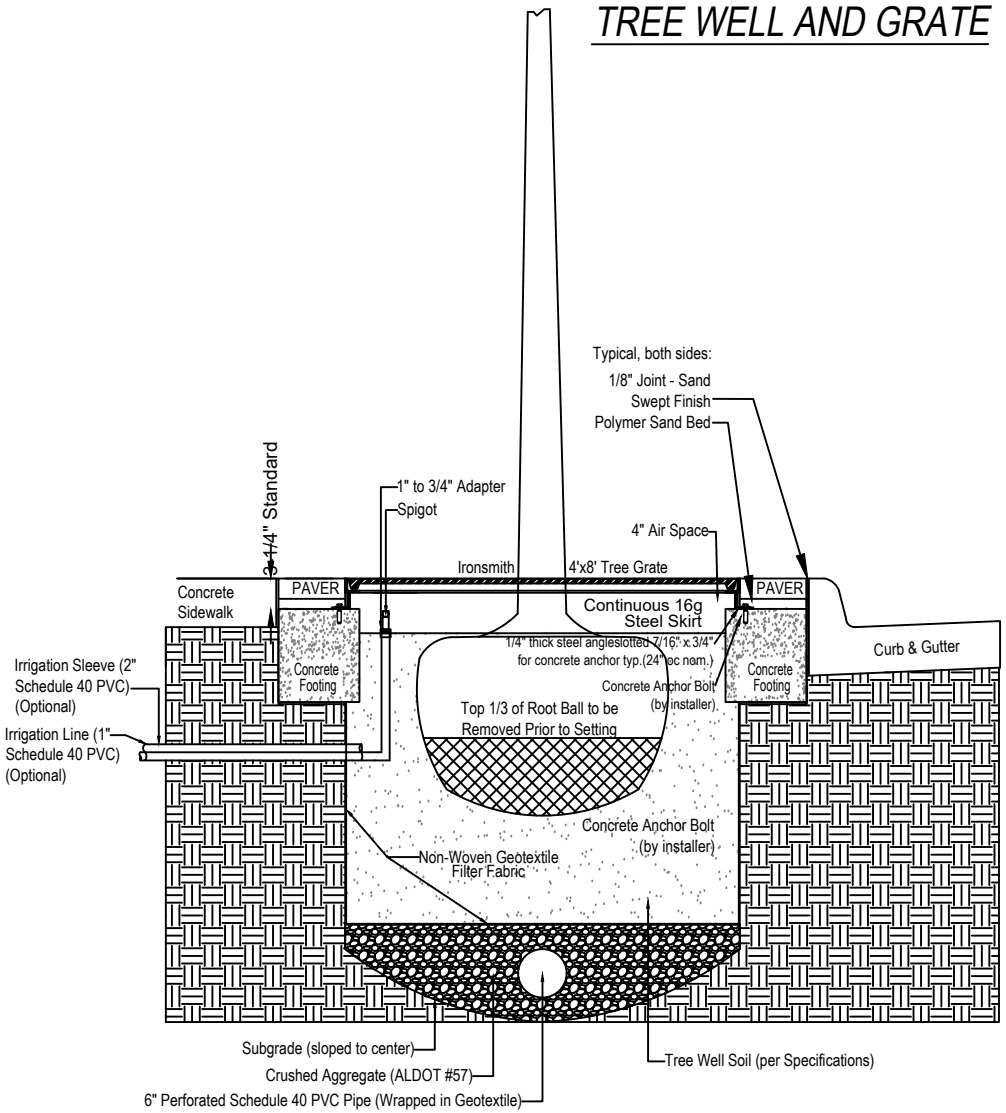

STANDARD DETAILS: STREETS	5.24
DEPARTMENT: ENGINEERING	REVISIONS:
SCALE: N.T.S.	
DRAWN BY: GINA McCRICKARD	
CITY ENGINEER: Alison Frazier	
APPVD. BY: Alison Frazier	
IMPLEMENTED: 01-01-2022	

City of Auburn

TREE WELL AND GRATE

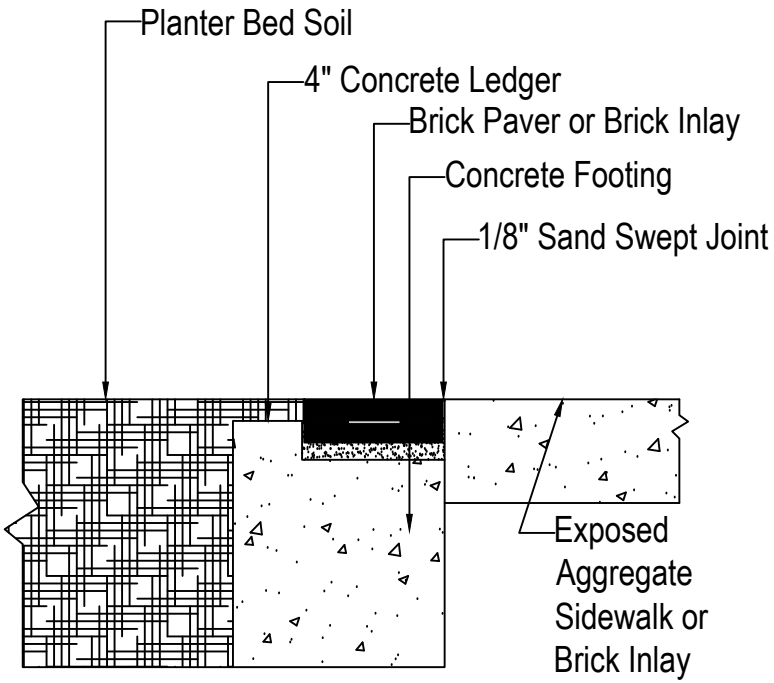

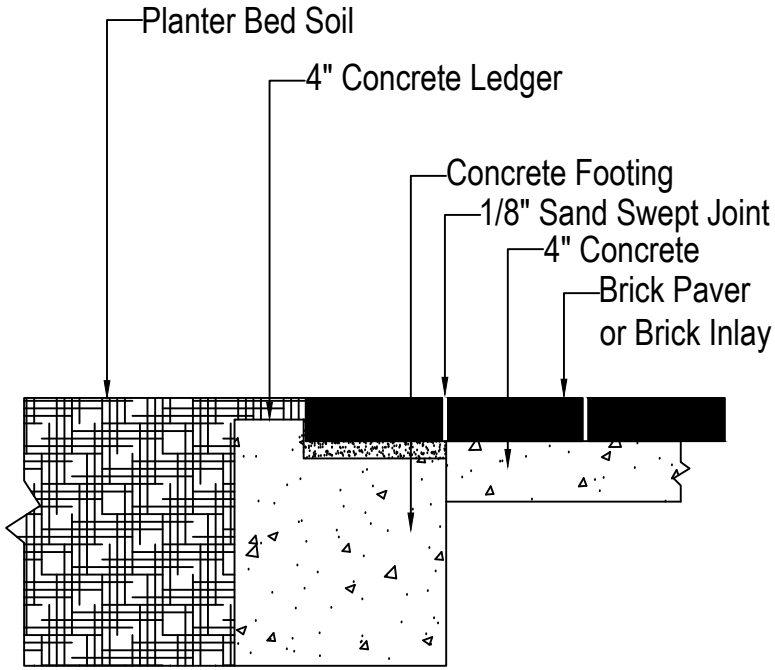

STANDARD DETAILS: STREETS	5.25
City of Auburn	
DEPARTMENT: ENGINEERING	REVISIONS:
SCALE: N.T.S.	
DRAWN BY: GINA McCRICKARD	
CITY ENGINEER: Alison Frazier	
APPVD. BY: Alison Frazier	
IMPLEMENTED: 01-01-2022	

ROOT BARRIER

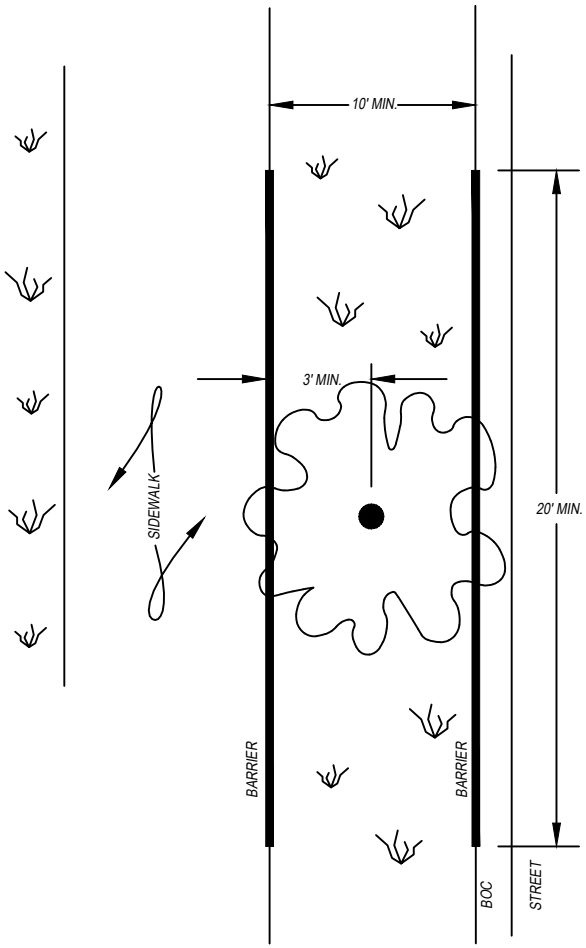

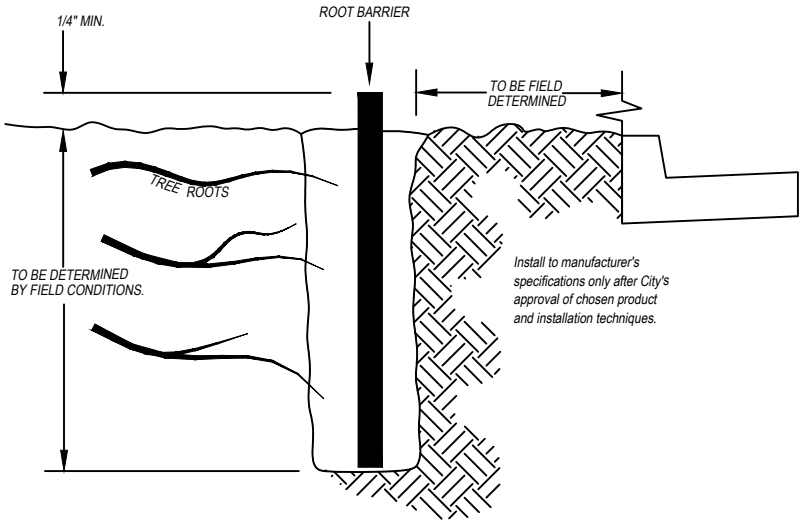

TREES MUST BE 10' MIN. FROM ALL POTABLE WATER / SANITARY SEWER FEATURES.

TREES MAY BE LOCATED 6' MIN FROM CURB INLETS WHEN BARRIER INSTALLED AT INLETS. OTHERWISE, SETBACK IS 10' MIN.

BARRIER TO BE INSTALLED AGAINST CURB / SIDEWALK / INLETS ACCORDING TO MANUFACTURER'S INSTRUCTION FOR THESE MIN. DISTANCES.

STANDARD DETAILS: STREETS	5.26
City of Auburn	
DEPARTMENT: ENGINEERING	REVISIONS:
SCALE: N.T.S.	
DRAWN BY: GINA McCRICKARD	
CITY ENGINEER: Alison Frazier	
APPVD. BY: Alison Frazier	
IMPLEMENTED: 01-01-2022	

PLANTINGS

ACCEPTABLE

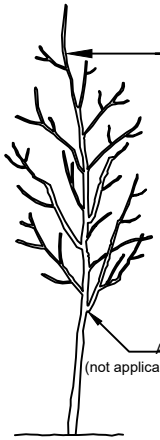

One central leader
(No codominant
leaders)

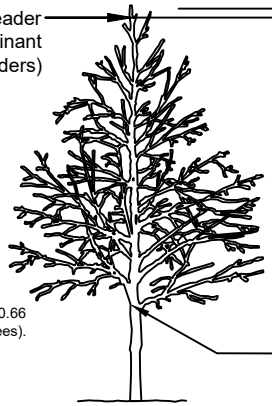

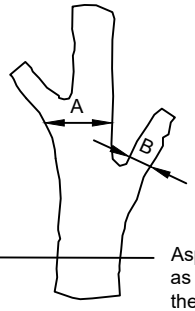

Example		
A	B	Aspect Ratio
1.50"	0.50"	0.33
2.50"	0.90"	0.36
2.0"	1.00"	0.50
2.50"	1.60"	0.64

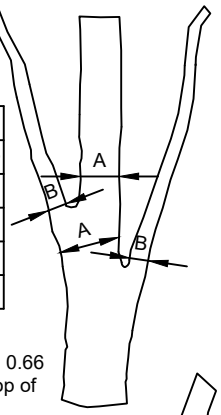

Aspect ratio is less than 0.66
(not applicable for columnar form trees).

Aspect ratio of B:A less than 0.66
as measured 1" above the top of
the branch union.

REJECTABLE

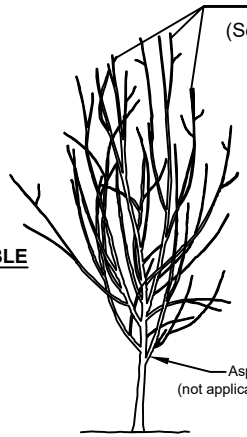

Multiple leaders
(Several codominant
leaders)

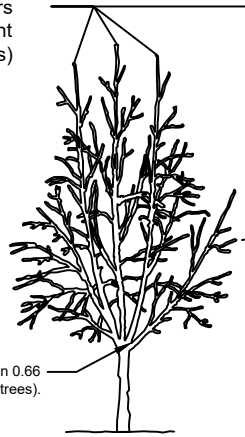

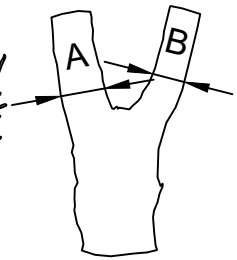

Example		
A	B	Aspect Ratio
2.50"	1.80"	0.72
2.0"	2.0"	1.0
2.50"	2.0"	0.80
4.0"	3.0"	0.75

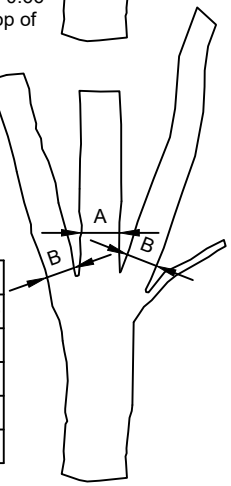

Aspect ratio is greater than 0.66
(not applicable for columnar form trees).

Aspect ratio of B:A greater than or equal to 0.66 as measured
1" above the top of the branch union.

Notes:
1- Aspect ratio shall be less than 0.66 on all branch unions. Aspect ratio is the diameter of branch (B) divided by the diameter of the trunk (A) as measured 1" above the top of the branch union. This criterion is not applicable for columnar form trees.

2- Any tree not meeting the crown observations detail may be rejected.

TREE ACCEPTANCE CRITERIA

ADAPTED FOR USE FROM:
URBAN TREE FOUNDATION © 2014

STANDARD DETAILS: STREETS	5.27
City of Auburn	
DEPARTMENT: ENGINEERING	REVISIONS:
SCALE: N.T.S.	
DRAWN BY: GINA McCRICKARD	
CITY ENGINEER: Alison Frazier	
APPVD. BY: Alison Frazier	
IMPLEMENTED: 01-01-2022	

PLANTINGS

ACCEPTABLE

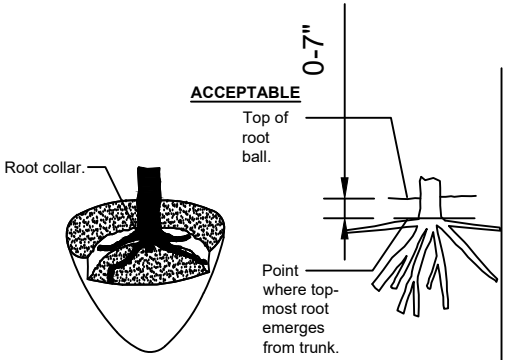

The point where top-most root(s) emerges from the trunk (root collar) should be within the top 2" of substrate. The root collar and the root ball interior should be free of defects including circling, kinked, ascending, and stem girdling roots. Structural roots shall reach the periphery near the top of the root ball.

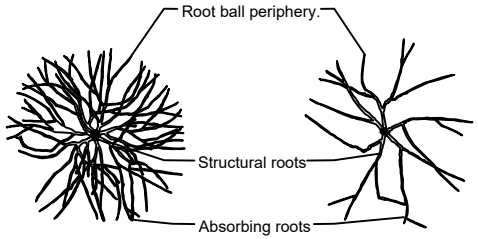

Roots radiate from trunk and reach side of root ball without defecting down or around.

REJECTABLE

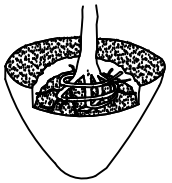

Structural roots circle interior of root ball. No structural roots are horizontal and reach the root ball periphery near the top of the root ball.

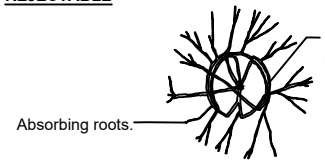

Only absorbing roots reach the periphery near the top of the root ball. Structural roots mostly wrap or are deflected on the root ball interior.

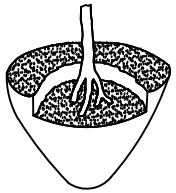

Structural roots descend into root ball interior. No structural roots are horizontal and reach the root ball periphery near the top of the root ball.

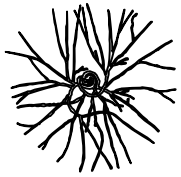

Structural roots circle and do not radiate from the trunk.

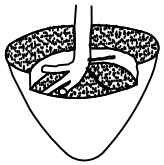

Structural roots primarily grow to one side.

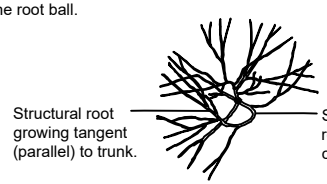

Structural roots missing from one side, and/or grow tangent to trunk.

Notes:
1- Observations of roots shall occur prior to acceptance. Roots and soil may be removed during the observation process; substrate/soil shall be replaced after the observations have been completed.

ROOT BALL CRITERIA - BALLED AND BURLAPPED

STANDARD DETAILS: STREETS	5.28
City of Auburn	
DEPARTMENT: ENGINEERING	REVISIONS:
SCALE: N.T.S.	
DRAWN BY: GINA McCRICKARD	
CITY ENGINEER: Alison Frazier	
APPVD. BY: Alison Frazier	
IMPLEMENTED: 01-01-2022	

PLANTINGS

ACCEPTABLE

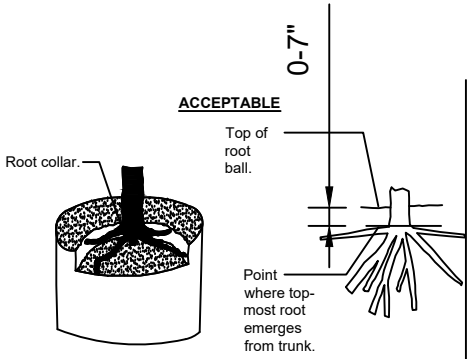

The point where top-most root(s) emerges from the trunk (root collar) should be within the top 2" of substrate. The root collar and the root ball interior should be free of defects including circling, kinked, ascending, and stem girdling roots. Structural roots shall reach the periphery near the top of the root ball.

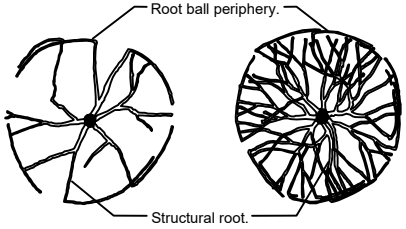

Roots radiate from trunk and reach side of root ball without deflecting down or around.

REJECTABLE

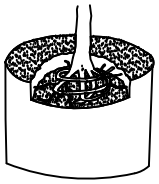

Structural roots circle interior of root ball. No structural roots are horizontal and reach the root ball periphery near the top of the root ball.

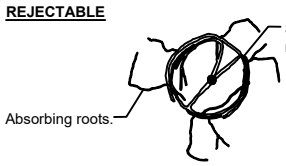

Only absorbing roots reach the periphery near the top of the root ball. Structural roots mostly wrap or are deflected on the root ball interior.

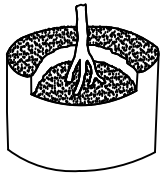

Structural roots descend into root ball interior. No structural roots are horizontal and reach the root ball periphery near the top of the root ball.

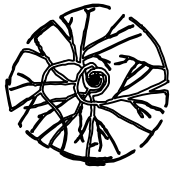

Structural roots circle and do not radiate from the trunk.

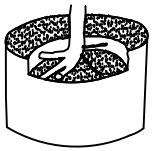

Structural roots primarily grow to one side.

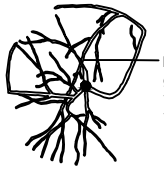

Structural roots missing from one side, and/or grow tangent to trunk.

Notes:

1- Observations of roots shall occur prior to acceptance. Roots and substrate may be removed during the observation process; substrate/soil shall be replaced after observation has been completed.

2- Small roots (¼" or less) that grow around, up, or down the root ball periphery are considered a normal condition in container production and are acceptable however they should be eliminated at the time of planting. Roots on the periperhy can be removed at the time of planting. (See root ball shaving container detail).

ROOT BALL CRITERIA - CONTAINERIZED

ADAPTED FOR USE FROM:
URBAN TREE FOUNDATION © 2014

STANDARD DETAILS: STREETS | 5.29

City of Auburn

DEPARTMENT: ENGINEERING	REVISIONS:
SCALE: N.T.S.	
DRAWN BY: GINA McCRICKARD	
CITY ENGINEER: Alison Frazier	
APPVD. BY: Alison Frazier	
IMPLEMENTED: 01-01-2022	

PLANTINGS

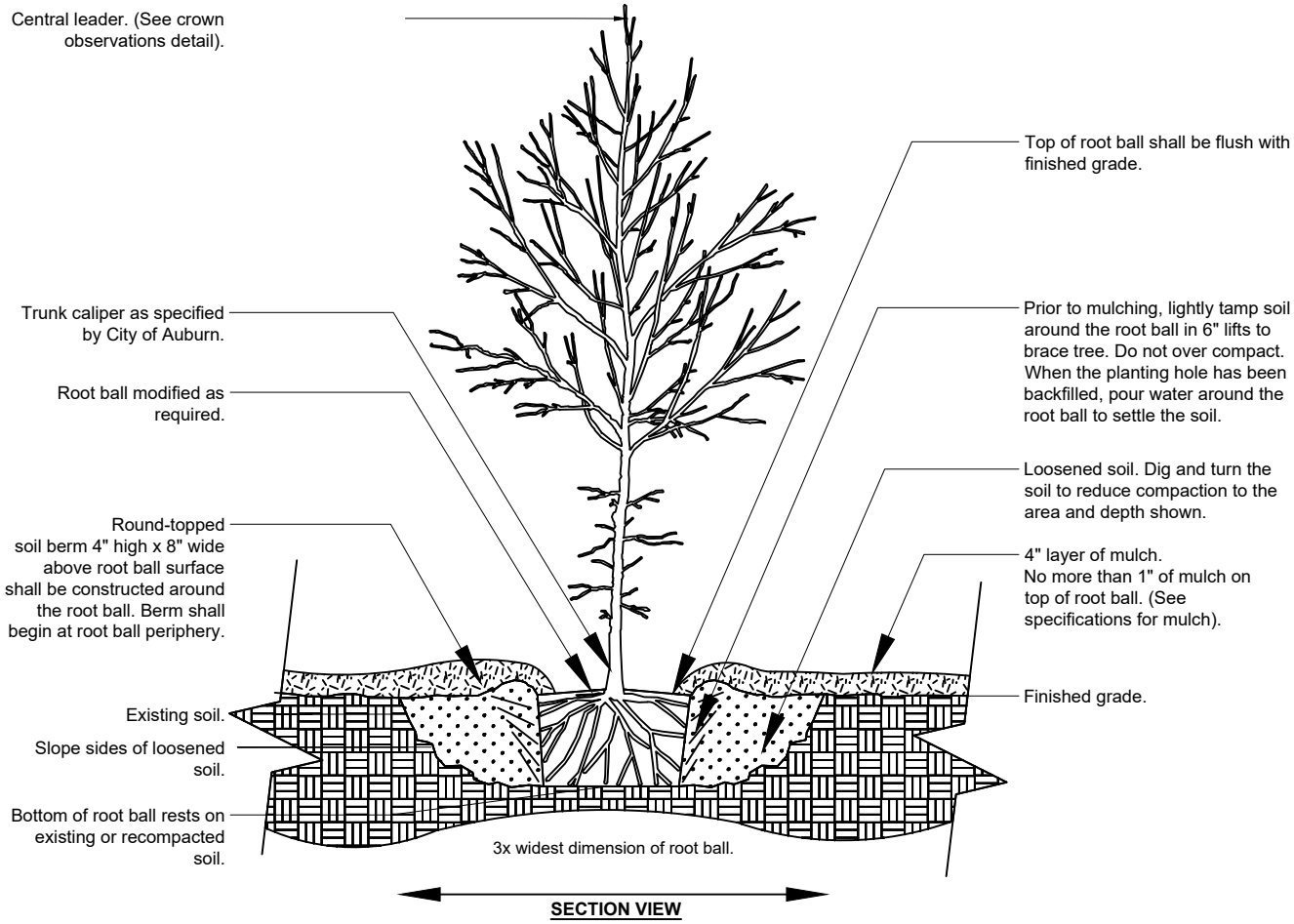

SECTION VIEW

TREE w/ BERM

Notes:

1- Trees shall be of quality prescribed in crown observations and root observations details and specifications.

2- See specifications for further requirements related to this detail.

STANDARD DETAILS: STREETS	5.30
DEPARTMENT: ENGINEERING	REVISIONS:
SCALE: N.T.S.	
DRAWN BY: GINA McCRICKARD	
CITY ENGINEER: Alison Frazier	
APPVD. BY: Alison Frazier	
IMPLEMENTED: 01-01-2022	

City of Auburn

PLANTINGS

Notes:
1- Trees shall be of quality prescribed in crown observations and root observations details and specifications.

2- See specifications for further requirements related to this detail.

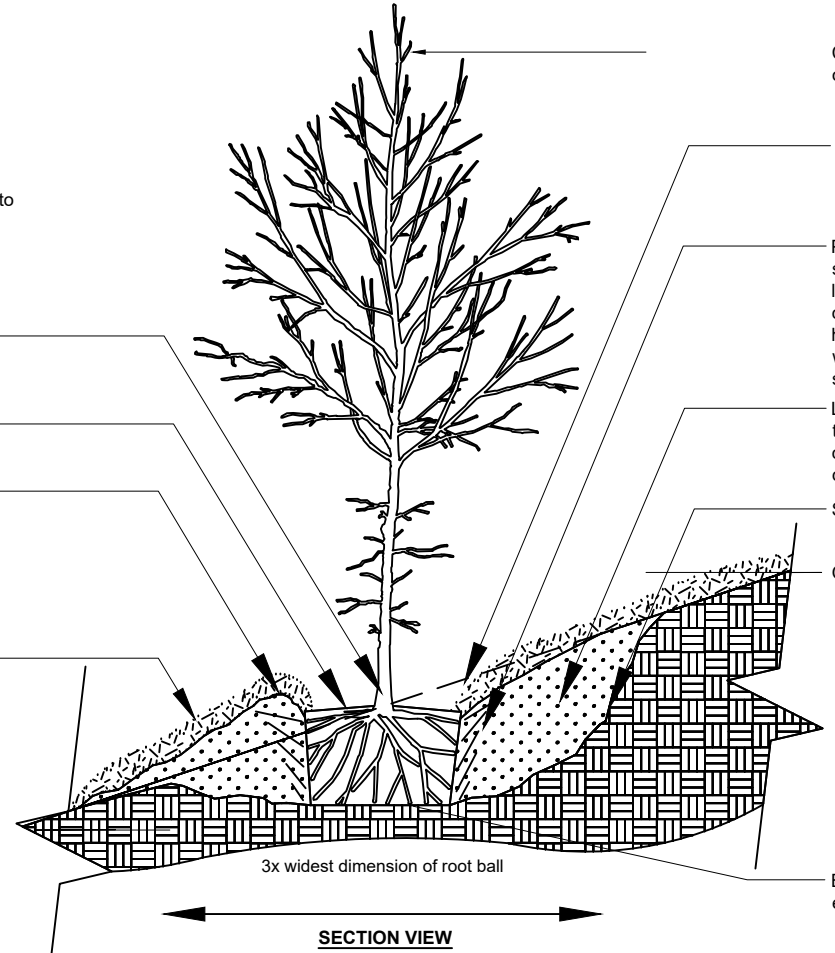

TREE ON SLOPE

ADAPTED FOR USE FROM:
URBAN TREE FOUNDATION © 2014

STANDARD DETAILS: STREETS	5.31
City of Auburn	
DEPARTMENT: ENGINEERING	REVISIONS:
SCALE: N.T.S.	
DRAWN BY: GINA McCRICKARD	
CITY ENGINEER: Alison Frazier	
APPVD. BY: Alison Frazier	
IMPLEMENTED: 01-01-2022	

PLANTINGS

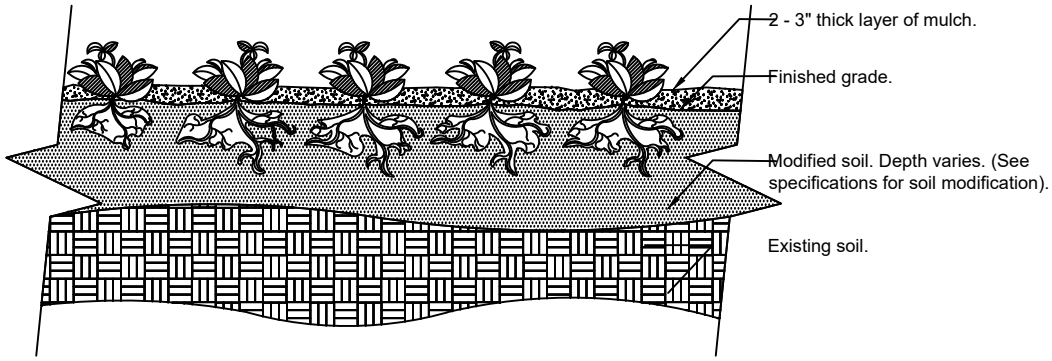

SECTION VIEW

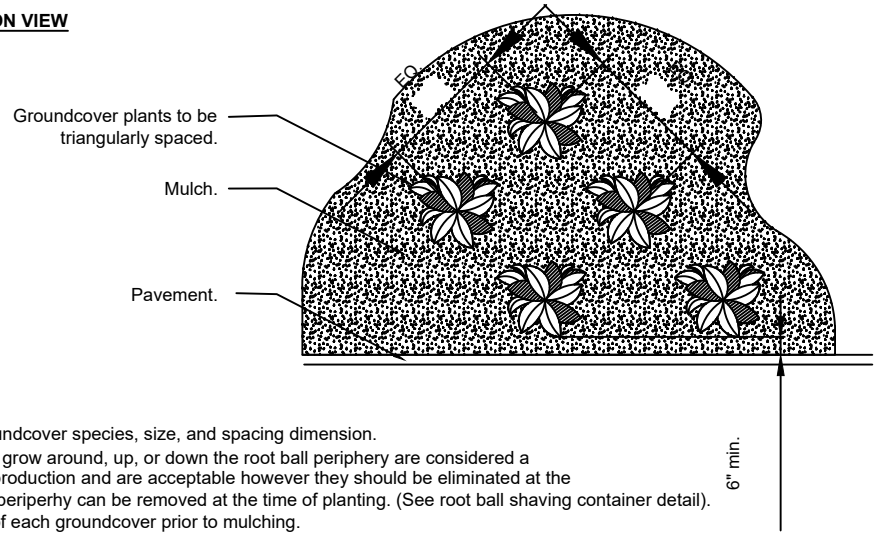

PLAN

Notes:
1- See planting legend for groundcover species, size, and spacing dimension.
2- Small roots (¼" or less) that grow around, up, or down the root ball periphery are considered a normal condition in container production and are acceptable however they should be eliminated at the time of planting. Roots on the periperhy can be removed at the time of planting. (See root ball shaving container detail).
3- Settle soil around root ball of each groundcover prior to mulching.

GROUNDCOVER

ADAPTED FOR USE FROM:
URBAN TREE FOUNDATION © 2014

STANDARD DETAILS: STREETS	5.32
City of Auburn	
DEPARTMENT: ENGINEERING	REVISIONS:
SCALE: N.T.S.	
DRAWN BY: GINA McCRICKARD	
CITY ENGINEER: Alison Frazier	
APPVD. BY: Alison Frazier	
IMPLEMENTED: 01-01-2022	

PLANTINGS

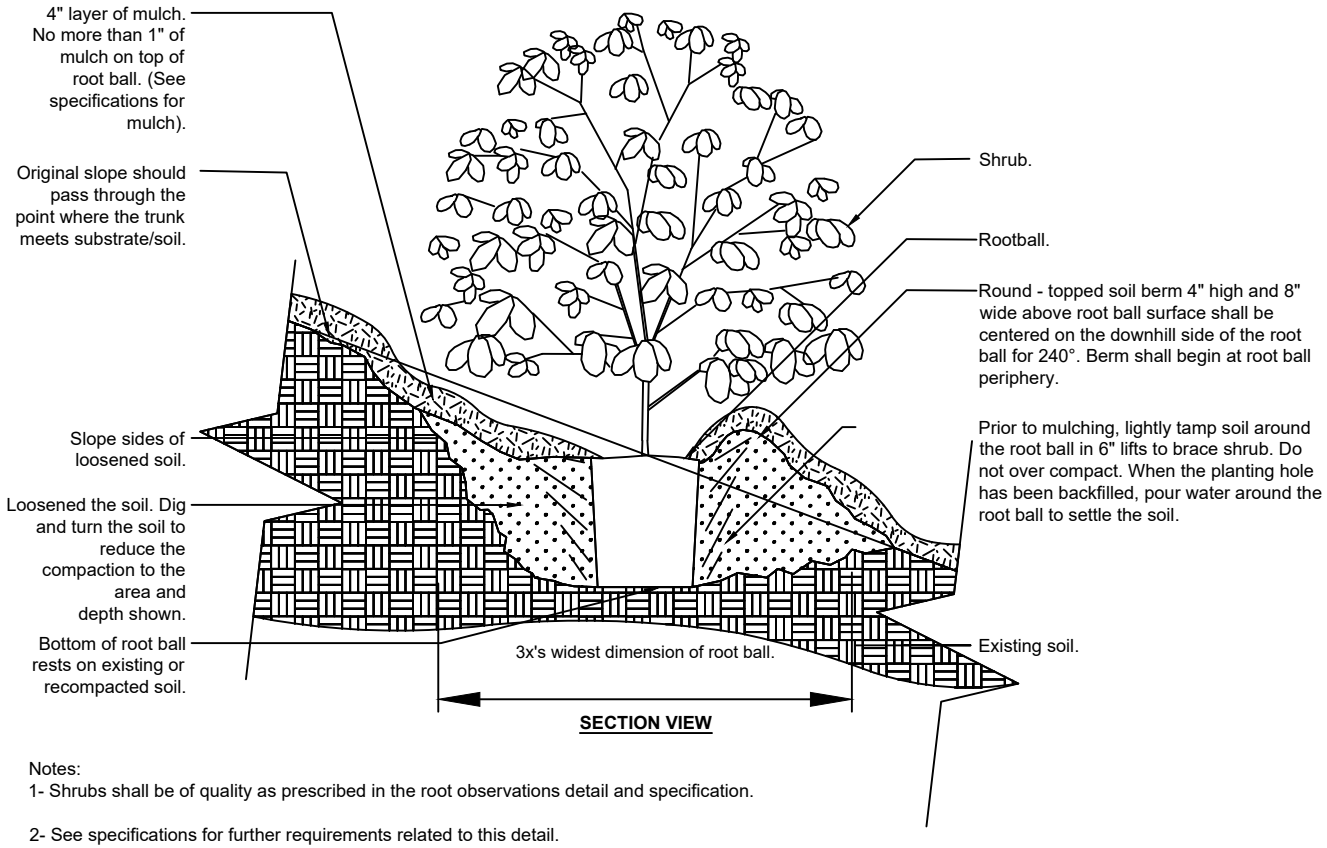

SECTION VIEW

Notes:
1- Shrubs shall be of quality as prescribed in the root observations detail and specification.

2- See specifications for further requirements related to this detail.

SHRUB PLANTING ON SLOPE

ADAPTED FOR USE FROM:
URBAN TREE FOUNDATION © 2014

STANDARD DETAILS: STREETS	5.33
City of Auburn	
DEPARTMENT: ENGINEERING	REVISIONS:
SCALE: N.T.S.	
DRAWN BY: GINA McCRICKARD	
CITY ENGINEER: Alison Frazier	
APPVD. BY: Alison Frazier	
IMPLEMENTED: 01-01-2022	

PLANTINGS

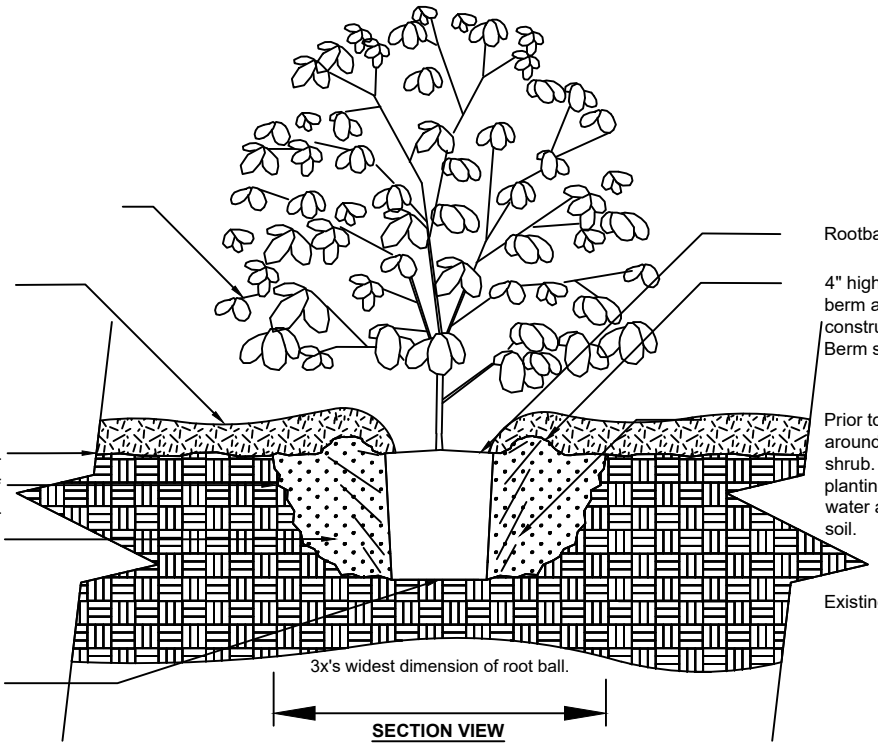

Notes:
1- Shrubs shall be of quality prescribed in the root observations detail and specifications.

2- See specifications for further requirements related to this detail.

SHRUB PLANTING

ADAPTED FOR USE FROM:
URBAN TREE FOUNDATION © 2014

STANDARD DETAILS: STREETS	5.34
City of Auburn	
DEPARTMENT: ENGINEERING	REVISIONS:
SCALE: N.T.S.	
DRAWN BY: GINA McCRICKARD	
CITY ENGINEER: Alison Frazier	
APPVD. BY: Alison Frazier	
IMPLEMENTED: 01-01-2022	

Planting Guidelines

- *If a contractor is performing tree planting, they shall notify the City of Auburn Urban Forestry Specialist 24 hours in advance of the planting of any tree within the City's Right of Way.*
- *All planting locations within the public right of way shall be checked for underground conflicts.*
- *Remove container or top third of burlap and all ropes, wires, etc. from root ball.*
- *Dig planting holes 2-3 times as wide as the container. The depth of the planting pit shall be equal to the size of the rootball. Place the tree in the planting pit so the trunk flare or the top of the root ball is at least one-half inch to 1 inch (1/2" to 1") above finish grade. In grass covered parkways the top of the rootball shall be higher than the surrounding soil by one-half inch to one inch (1/2" to 1").*
- *When obtaining a tree from a nursery, always carry the tree by its container or rootball, never by the trunk.*
- *After removing the tree from the container, cut circling roots and matted roots off the bottom. Check for any circling roots missed during initial inspection.*
- *Before placing the tree in the planting pit, examine the root ball for injured roots and the canopy for broken branches. Damaged roots shall be cleanly cut off at a point just in front of the break. Broken branches shall be cut out of the canopy making sure that the branch collar is not damaged.*
- *Backfill with soil removed from the planting hole, or as required for structural cells or structural soils. Only add fertilizer or compost if soil analysis indicates it is required. Build a temporary four to six inches (4" to 6") water retention berm around the root ball to allow for establishment watering. Immediately after planting the tree, water it thoroughly by filling the water retention basin twice.*
- *Eliminate all air pockets while backfilling the planting pit by watering the soil as it is put into the hole. Do not compact the backfill by tamping it down.*
- *All staking, wrapping, and other material should be removed from the tree trunk, root ball, and canopy at planting. No staking of trees shall be permitted unless approved by the City of Auburn Urban Forestry Specialist or a representative thereof. Approved staking must be removed after one year.*
- *Mulch with a two to four inch (2" to 4") layer to conserve soil moisture, provide protection from extreme temperatures and prevent damage from weed eaters. Mulch shall be kept three to four inches (3" to 4") away from the tree trunk and shall extend at minimum to the boundary of the water retention basin. It may extend further if desired.*
- *Install tree bags or donuts at planting to provide supplementary water during the first year. The soil around the new tree shall be kept moist, but not saturated, by watering at least once a week when adequate rainfall is not received.*
- *Substitution of plant species, sizes, or other specifications will not be allowed without prior approval of the City of Auburn Landscape and Sustainability Division Manager or a representative thereof.*

Soil Requirements

The following options are suitable for planting trees in the City of Auburn Right of Way. These specifications apply to normal conditions. Alterations for utility conflicts, slopes, or drainage may be approved by the Urban Forestry Specialist a representative thereof. For the purpose of this document, understory trees are defined as less than 30' mature height, midstory trees are defined as 30' - 50' mature height, and overstory trees are defined as 50' or greater mature height.

Planting type	*Soil volume*			*Soil depth*	*Soil requirements*
	Understory	***Midstory***	***Overstory***		
Buffer strip	*400*	*800*	*1000*	*36" minimum*	*May use soil removed from the planting hole amended as necessary amended as necessary according to soil test*
Structural cells	*400*	*800*	*1000*	*No minimum 10" - 43" depth available depending on product*	*Native topsoil amended as necessary according to soil test*
Structural soil	*1600*	*3200*	*4000*	*36" Minimum*	*Non-proprietary or patented products may be used according to system specification*

Soil testing requirements

All soils must be submitted for testing to determine texture and pH and results provided at Least four weeks prior to scheduled installation. Native topsoil must be classified as a sandy loam with a pH between 5 and 7. If tests fail to meet specifications, the Urban Forestry Specialist or representative thereof may require amendments before it is accepted. All soil testing will be at the expense of the contractor.

Structural cells

Structural cells may include Silva Cell by Deep Root Partners, StrattaCell by CityGreen, or approved equal. At least four weeks prior to installation, the contractor shall submit manufacturer's literature to the Urban Forestry Specialist. Installation of the structural cells shallfully comply with all requirements of the manufacturer and/or licensed supplier.

APPENDIX P. Request for Installation of Traffic Signs

This page intentionally left blank.

Engineering Services Department
Traffic Engineering Division
161 North Ross Street
Auburn, AL 36830

REQUEST FOR INSTALLATION OF TRAFFIC SIGNS

Please complete the following information:

Development Name: _____

Contact: _____ Daytime Phone: _____

Address: _____

Email (optional): _____

Fill in number of signs requested:

☐ Stop Sign (A) ☐ Yield Sign (B) ☐ Speed Limit _____ mph (C1)

☐ Dead End (D) ☐ No Outlet (E) ☐ Speed Limit _____ mph (C2)

☐ Other (F): _____ ☐ Other (G): _____

Street Name Signs: ***Attach additional sheets if necessary.***

	North/South Street	East/West Street	
☐			(H1)
☐			(H2)
☐			(H3)
☐			(H4)
☐			(H5)
☐			(H6)

Provide a map with the approximate locations of requested signs, labeled as "A" for Stop Signs, "B" for Yield Signs, etc. The Traffic Engineering Division of the Engineering Services Department will perform any necessary data collection and analysis to assess the need for the installation of a requested traffic sign. All signs shall be installed in accordance with the Manual on Uniform Traffic Control Devices, latest edition.

Signature: _____ **Date:** _____

This section for official use only

Evaluation	**Determination**	**By/Date**
Planning Commission approved name		
Speed limits		
In accordance with MUTCD		
Cost Estimate		
Recommendation		

This page intentionally left blank.

APPENDIX P-1. Irrigation Policy

This page intentionally left blank.

City of Auburn

Irrigation Policy

Effective January 1, 2013

Purpose: The purpose of this policy is to protect the use of public rights of way for their intended purposes and to repair and replace utilities located in public right of way at the lowest cost to the City of Auburn.

Background: The City of Auburn allows encroachments upon public right of way provided that such uses have been permitted and do not diminish the City's rights to use the public right of way for maintenance, repair, or expansion of infrastructure. Often private property owners install, construct, or cause to be constructed irrigation systems and landscaping within the right of way that can be affected by expanding the infrastructure. All of these actions have increased the costs to the City when performing maintenance, repair, or expansion of the infrastructure.

Policy:

1. To reduce the costs to City projects, the City shall not restore nor pay any restoration or replacement costs for any encroachment on public right of way, except as outlined in below.
2. Any work within existing street right of way will require an encroachment agreement and/or hold harmless agreement.
3. All trees planted within right of way, 10 feet from any paved surface, will include City approved root barriers.
4. It is understood that irrigation systems placed on City of Auburn right of way are placed there at the risk of the property owner and may be removed with notice to the owners without compensation or replacement.

In the case where the City allows irrigation within the City of Auburn right of way, the following shall apply:

1. A permit is required to be obtained from the Inspection Services Department.
2. The system should be installed per the standard details outlined in the Engineering Design and Construction Manual.
3. No major irrigation equipment, such as backflow, controller, remote control valves or mainlines shall be located within the right of way. Lateral line, emitter and distribution tubing may be located within the right of way, but should be as close to the property line as possible.

4. Heads and pipe type shall be of a common type such that replacement is easily accommodated.
5. A hold harmless/indemnity agreement, and certification that if the city needs the right of way to expand infrastructure, the irrigation system and appurtenances will be removed as part of the construction. The homeowner understands that the City or its assigns has the right to remove the obstruction to accommodate the infrastructure expansion. The City will not replace irrigation or landscaping that had been placed on the right of way without prior approval by the Engineering Services Department.

Please contact the Engineering Services Department at (334) 501-7390 or www.auburnalabama.org/engineering-services/ for questions concerning this policy.

APPENDIX P-2. Decorative Street Signs Policy

This page intentionally left blank.

City of Auburn

Decorative Street Signs Policy

(This policy is to be used in conjunction with the Engineering Design and Construction Manual Section 5.7 Signing and Permanent Markings)

Purpose

This policy document sets out formal policy and guidelines for developers and homeowners associations on the requirements for maintenance of decorative street name signs.

Background

The Traffic Engineering Division of the Engineering Services Department receives many requests each year to provide street name signs and regulatory signs within the City. The City of Auburn standard street name sign is reflective navy blue background with reflective white lettering. A one time charge of $125.00 per intersection is billed to the developer upon installation of City standard street name signs. Many developers request the use of decorative signs and posts that are unique to their subdivision.

Policy

The City of Auburn will not be responsible for replacement of decorative signs and posts. If a decorative sign or post is damaged it is the responsibility of the developer or homeowners association to replace and/or repair the sign within 7 days of being notified by the Engineering Services Department Administration Division of the deficiency by mail and/or email. If requested by the developer or homeowners association, the City of Auburn will install a temporary replacement sign until a new sign can be obtained. Upon installation of the new decorative sign, the temporary signs and posts should be returned to the City of Auburn. If the sign is not returned, the developer or homeowners association will be charged $125.00 for the temporary sign.

If the sign has not been repaired or replaced within 7 days and a temporary sign not requested, the Administrative Division will advise the Sign Technician to install a standard COA sign. The Sign Technician will follow up one month after installation of a temporary sign to see if the developer or homeowners association has taken any action. If the temporary sign has been replaced with a decorative sign and the temporary sign has not been returned to the City, the homeowners association will be charged for the temporary sign.

Note: Stop signs will require a COA sign be installed immediately for the safety of the public.

Contact the City of Auburn's Traffic Engineering Division at (334) 501-7390 or email us at webengineering@auburnalabama.org for questions concerning this policy.

APPENDIX P-3. Downtown Sidewalks and Pedestrian Lighting Map

This page intentionally left blank.

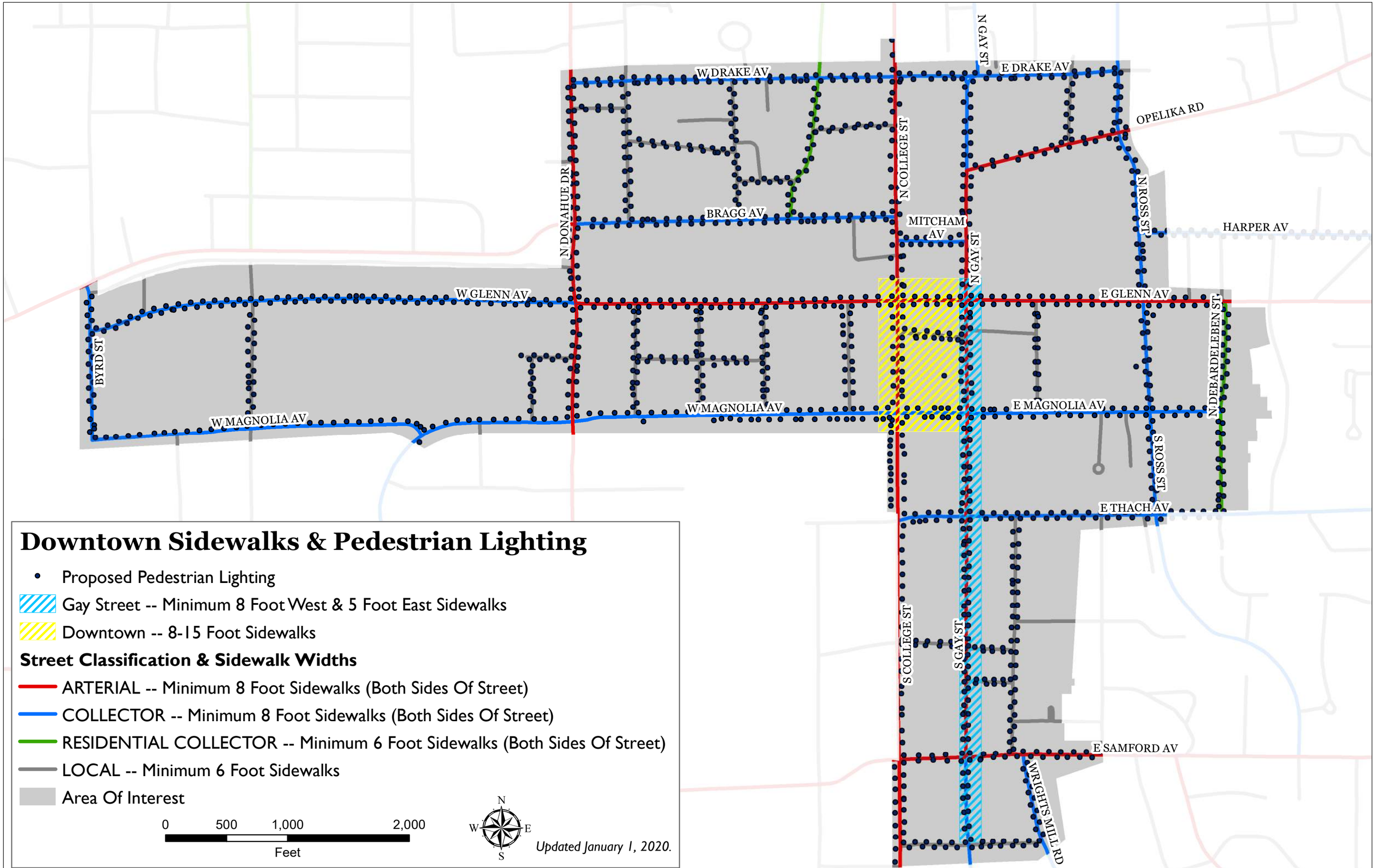
W DRAKE AV
E DRAKE AV
N GAY ST
OPELIKA RD
N COLLEGE ST
N DONAHUE DR
BRAGG AV
MITCHAM AV
N ROSS ST
HARPER AV
N GAY ST
W GLENN AV
E GLENN AV
N DEBARDELEBEN ST
BYRD ST
W MAGNOLIA AV
W MAGNOLIA AV
E MAGNOLIA AV
S ROSS ST
E THACH AV
S COLLEGE ST
S GAY ST
E SAMFORD AV
WRIGHTS MILL RD
Downtown Sidewalks & Pedestrian Lighting
Proposed Pedestrian Lighting
Gay Street -- Minimum 8 Foot West & 5 Foot East Sidewalks
Downtown -- 8-15 Foot Sidewalks
Street Classification & Sidewalk Widths
ARTERIAL -- Minimum 8 Foot Sidewalks (Both Sides Of Street)
COLLECTOR -- Minimum 8 Foot Sidewalks (Both Sides Of Street)
RESIDENTIAL COLLECTOR -- Minimum 6 Foot Sidewalks (Both Sides Of Street)
LOCAL -- Minimum 6 Foot Sidewalks
Area Of Interest
0
500
1,000
2,000
Feet
N
W
E
S
Updated January 1, 2020.

This page intentionally left blank.

APPENDIX P-4. Decorative Pedestrian Lighting Master Plan

This page intentionally left blank.

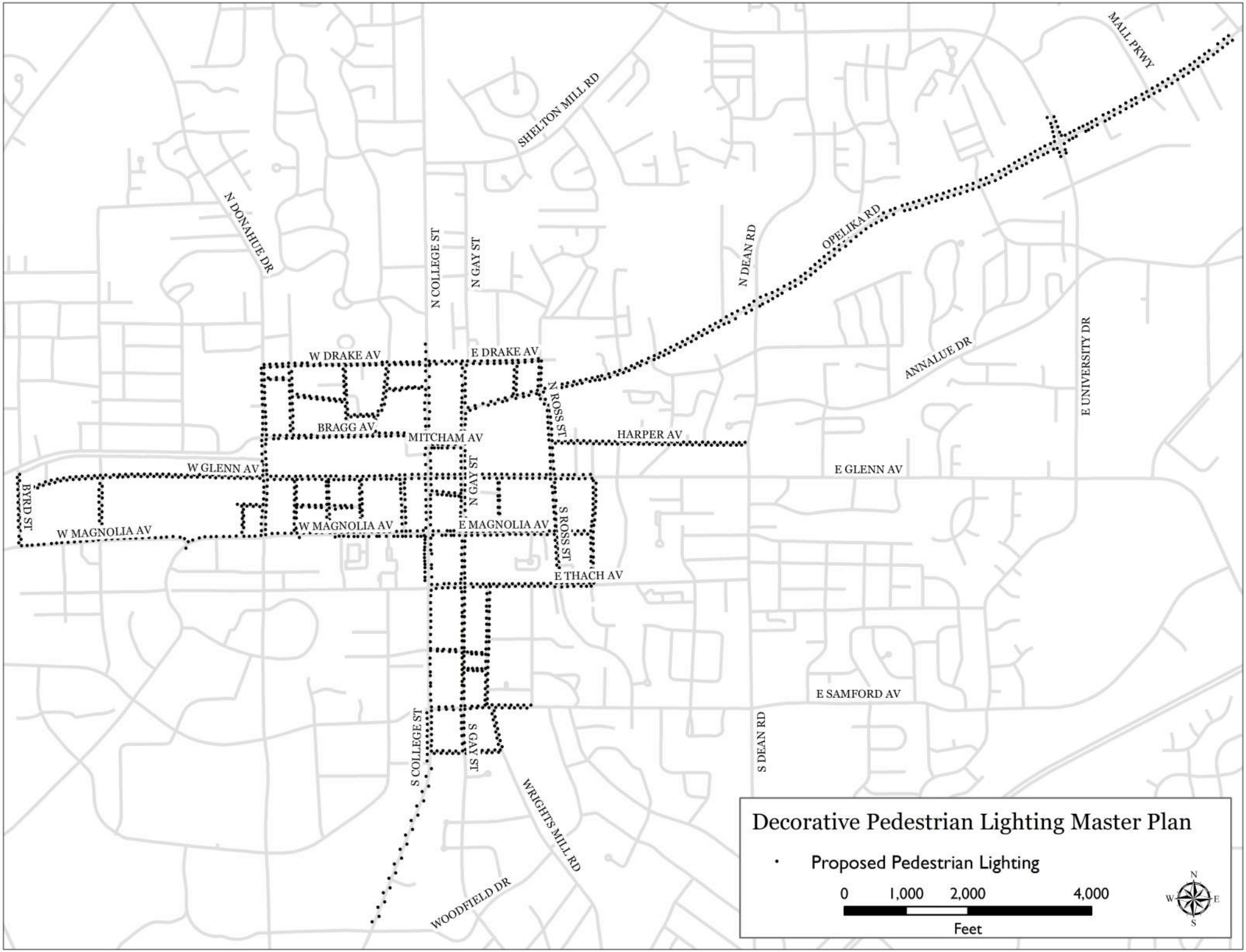
Decorative Pedestrian Lighting Master Plan
Proposed Pedestrian Lighting
0
1,000
2,000
4,000
Feet
N
S
E
W
MALL PKWY
SHELTON MILL RD
N DONAHUE DR
N COLLEGE ST
N GAY ST
N DEAN RD
OPELIKA RD
ANNALUE DR
E UNIVERSITY DR
W DRAKE AV
E DRAKE AV
N ROSS ST
BRAGG AV
MITCHAM AV
HARPER AV
W GLENN AV
E GLENN AV
BYRD ST
W MAGNOLIA AV
E MAGNOLIA AV
S ROSS ST
E THACH AV
E SAMFORD AV
S COLLEGE ST
S GAY ST
S DEAN RD
WRIGHTS MILL RD
WOODFIELD DR

This page intentionally left blank.

APPENDIX P-5. Turn Lane Requirements by Roadway

This page intentionally left blank.

Turn Lane Requirements by Roadway

AUBURN

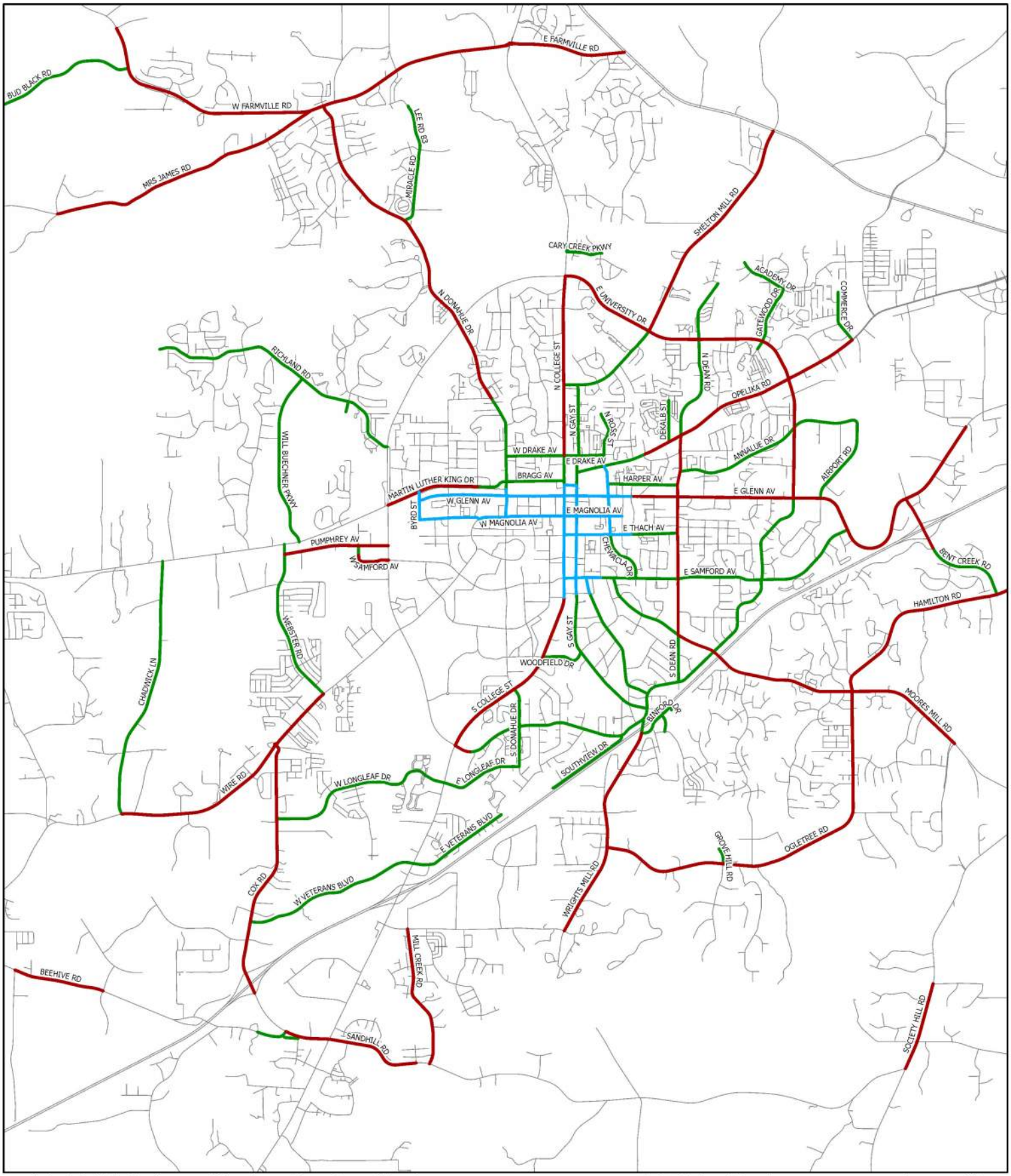

Arterials & Collectors >= 40 mph
Arterials & Collectors < 40 mph
All Roadways
Downtown Streets
Art & Col > 3 Lanes

The City of Auburn, Alabama does not guarantee or warrant the accuracy of this map or any information contained herein. Information may contain errors and should be verified by an appropriately qualified, licensed and independent professional.

Engineering Services
08/01/2026

This page intentionally left blank.

SECTION 6

6.0 GEOTECHNICAL

6.1 INTRODUCTION

The purpose of this section of the Manual is to provide guidance on geotechnical components related to the design of City infrastructure and to provide appropriate references to applicable standards and regulations that are located in other publications. The City Standard Specifications provides information related to geotechnical topics such as subsurface investigations, laboratory testing requirements for soil and construction materials, rock excavation, and field testing and inspections. The City Standard Specifications shall cover the minimum requirements for testing involved in the construction of embankments, streets, concrete structures, sanitary sewer systems, storm sewer systems, and water mains and appurtenances.

A geotechnical investigation is generally not required for proposed streets that will be dedicated to the City. However, when a geotechnical investigation is required it shall be performed in accordance with the City Standard Specifications.

Street projects that are initiated by the City shall require a geotechnical investigation to be performed in accordance with the City Standard Specifications.

Generally, retaining walls will not be constructed within the City right-of-way. However, in some situations existing conditions make it impracticable to keep the retaining wall out of the right-of-way. Retaining walls that will be located within the City right-of-way, and have a height of six (6) feet or greater, shall require a geotechnical investigation. Guidance related to the geotechnical investigation for retaining walls is located in Section 6.2 "Retaining Walls".

The City Standard Specifications shall apply to any earthwork being performed as part of a City project or as part of a project that will be dedicated to, or maintained by, the City. This will typically include earthwork (excavation and filling) associated with streets, utilities, public detention ponds, public parks, public parking lots, and other public facilities.

Embankments, or other earth slopes, that will be on City property, including right-of-way, shall be designed to be no steeper than 3:1. See the City Standard Specifications, Section 9, for construction and testing criteria.

6.2 RETAINING WALLS

6.2.1 General Overview

This section provides design standards and guidelines for performing geotechnical analyses for retaining walls that will be located on the City property including the right-of-way. At this time the only type of retaining walls that will be accepted by the City are cantilevered retaining walls constructed of reinforced concrete and Mechanically Stabilized Earth (MSE) walls utilizing geosynthetic reinforcement and a modular block face.

All retaining walls proposed to be constructed within the City right-of-way shall have the design approved by the City prior to beginning construction of the wall. Retaining walls that will be six (6) feet or greater in height, from the bottom of the footing or the bottom of the lowest block – to the top of the wall face, shall require a geotechnical investigation to verify design parameters. See Section 6.2.3 "Geotechnical Investigation" for the geotechnical investigation requirements.

Any retaining wall, public or private, greater than six (6) feet shall be inspected by the Inspection Services Department at the time of construction.

6.2.2 Internal and External Wall Stability

The internal and external stability of all retaining walls shall be evaluated by a licensed professional engineer in the State of Alabama. For walls greater than six (6) feet in height the following analyses should be submitted to the City:

<u>Reinforced concrete retaining walls</u>

- Factor of safety against overturning
- Factor of safety against sliding
- Factor of safety against bearing capacity failure
- Settlement calculations
- Global stability analysis

<u>MSE retaining walls</u>

- Factor of safety against sliding
- Factor of safety against bearing capacity failure
- Settlement calculations
- Factor of safety against reinforcement failure
- Global stability analysis

The submittal should include all hand calculations or all input parameters if computer software was used. All assumptions should be clearly stated. Assumptions about in-situ soil conditions and backfill material shall be verified by an appropriate geotechnical investigation.

6.2.3 Geotechnical Investigation

Geotechnical investigations for retaining walls shall be performed in accordance with this section of the Manual. Soil test borings shall be drilled at each end of a proposed retaining wall and on fifty (50) foot centers along the length of the wall. The depth of each soil boring

should be two (2) times the retaining wall height, rounded up to the nearest five (5) foot interval. If the soil boring(s) encounter unsuitable foundation materials, then the boring(s) should be extended an additional five (5) feet into firm soil layers or to auger refusal, whichever is less. For MSE walls, the boring location should be approximately at the midpoint between the face of the wall and the back of the reinforcement. For reinforced concrete walls, the boring location should be approximately beneath the centerline of the wall.

The geotechnical investigation should include appropriate field and laboratory testing necessary to verify the soil parameters used in designing the retaining wall. Typically, this shall include testing to estimate the following soil parameters and/or properties:

- Soil strength parameters of the foundation soils
- Consolidation properties of the foundation soils
- Soil strength parameters of backfill soils
- Soil properties associated with compaction of backfill materials
- Classification of backfill material
- Stabilized groundwater elevation

Additional testing may be specified by the engineer of record for the retaining wall. The City requires that a minimum compaction criteria of ninety-five (95%) percent of the maximum dry density, as determined by AASHTO T-99, be achieved on all backfill soils. The engineer of record for the retaining wall may specify more stringent compaction criteria.

6.2.4 Global Stability

A global stability analysis shall be performed on any retaining wall equal to or greater than six (6) feet high which will be constructed on a slope that is equal to or steeper than 4:1. The analysis may be performed using computer software but shall utilize Bishop's Method (or Bishop's Simplified Method). Effective stress parameters are to be used when analyzing for the long term stability of the embankment. The slope, when analyzed with the retaining wall in place, shall have a factor of safety of no less than one and three tenths (1.3). The analysis must be submitted to the City for review and approval prior to construction of the retaining wall.

6.2.5 Sliding, Overturning, Bearing Capacity, and Settlement

The following factors of safety shall be used in the retaining wall stability analysis:

- Factor of Safety against sliding: 1.5
- Factor of Safety against overturning: 2.0
- Factor of safety against bearing capacity failure: 2.0

Total settlement shall be limited to one and one-half (1.5) inches for MSE walls and one (1) inch for cantilevered retaining walls. Differential settlements shall be limited to one half (0.5) inches for all walls.

6.2.6 Backfill Drainage behind Retaining Walls

Adequate drainage is very important to the stability of a retaining wall. The use of granular backfill material, such as No. 57 stone, offers the benefits of good drainage, easy compaction, and increased sliding resistance.

Retaining wall drainage systems typically utilize weepholes and perforated pipe. Weepholes penetrate the retaining wall and drain the area immediately behind the wall. Weepholes should have a minimum diameter two (2) inches so as to permit free drainage; for large walls, four (4) inch weepholes are common. The spacing between weepholes should be approximately thirty-six (36) to forty-eight (48) inches to allow uniform drainage from behind the wall. A geotextile filter fabric, such as the Mirafi N-series or equivalent, should be used between the backfill soils and the weephole opening.

Excess groundwater should be discharged at the ends of the retaining wall or tied into a stormwater conveyance system. Water discharged at the ends of the retaining wall should be directed away from the toe of the wall and configured such that the potential for erosion is limited.

A geotextile filter fabric, such as the Mirafi N-Series or equivalent, should be used to separate the granular backfill material from the select backfill material, and allow groundwater to flow through it.

6.3 DAM DESIGN GUIDELINES

6.3.1 General Overview

The technical guidance for dam design and dam safety has been taken primarily from the Earth Dams and Reservoirs Technical Release (TR)-60, Natural Resources Conservation Service (NRCS); and Federal Guidelines for Dam Safety: Emergency Action Planning for Dam Owners (FEMA 64). The intent of this Section is to provide technical guidelines and requirements for the design and construction of dams within the City.

6.3.2 Dam Classification

A dam shall mean any artificial barrier, including appurtenant works, which impounds or diverts water, wastewater, or liquid borne materials. A dam meeting any of the following criteria shall be under the jurisdiction of the City:

a. Has an impounding capacity at a maximum water storage elevation of at least twenty (20) acre-feet; or
b. Is fifteen (15) feet or more in height; or
c. Will create a probable loss of human life in the event of failure or improper operation, regardless of height or storage capacity; or
d. Will create a probable loss of critical infrastructure in the event of failure or improper operation, regardless of height or storage capacity.

Items "c" and "d" shall be determined by the City Engineer. If a dam meets any of those criteria, the City shall then ask the engineer of record to assign a hazard category. The City shall use the NRCS TR-60 hazard category definitions. Typically, a dam breach analysis must be performed to determine the hazard classification. The City will not have purview over any dams less than six (6) feet in height or less than ten (10) acre-feet of impoundment.

The City shall review all jurisdictional dams through the DRT process. It is strongly encouraged that a pre-submittal meeting be setup with the City Engineer to discuss the design requirements for a particular proposed dam.

The engineer of record shall be required to determine the hazard classification of the proposed dam and provide the City with the engineering analysis that supports the hazard classification. The analysis and calculations shall be included in a written report that is required to be prepared by a licensed professional engineer in the State of Alabama. The engineer shall be competent in areas related to dam investigation, design, construction, and operation for the type of dam being investigated, designed, constructed or operated; and understands adverse dam incidents, failures and the potential causes and consequences of failures.

6.3.3 Classes of Dams

NRCS has established the following classifications of dams which include:

- Low Hazard Class,
- Significant Hazard Class, and

- High Hazard Class.

Low Hazard Dams are those dams which failure would at the most result in damage to agricultural land, farm buildings or minor roads.

Significant Hazard dams are those dams located in predominantly rural or agricultural areas where failure may damage isolated homes, main highways or minor railroads, or cause interruption of use or service of relatively important public utilities.

High Hazard dams are those dams in which failure may cause loss of life, serious damage to residential, industrial, or commercial buildings; or damage to, or disruption of, important public utilities or transportation facilities such as major highways or railroads. Dams proposed for construction in established or proposed residential, commercial, or industrial areas shall be given a *High Hazard* classification, unless the Applicant provides convincing evidence to the contrary.

6.3.4 Design and Safety Requirements

The TR-60 describes design procedures and provides minimum requirements for planning and designing earth dams and associated spillways. It is required that the design of High Hazard and Significant Hazard dams follow the procedures that are set forth in TR-60.

High Hazard dams must be capable of safely passing one hundred (100%) percent of the Probable Maximum Precipitation (PMP) through the principal spillway and emergency spillway without overtopping the dam. The PMP for Lee County, Alabama is approximately forty-four (44) inches for a twenty-four (24) hour period. The PMP data that was interpolated or extracted from Figure 20 of the Hydrometeorological Report No. 51, Probable Maximum Precipitation Estimates, United States East of the 105th Meridian, Office of Hydrology, National Weather Service, U.S. Department of Commerce, NOAA, June 1978.

Within thirty (30) days after completion of a High Hazard dam, the owner shall submit one (1) complete set of as-built plans and specifications to the Engineering Services Department. The submittal shall also include a letter signed by the engineer of record for the project, certifying that the dam was constructed in accordance with the approved plans and specifications.

Significant Hazard dams shall be designed to control the contributory watershed runoff from one hundred (100%) percent of the PMP without overtopping the dam. Within thirty (30) days after completion of a Significant Hazard dam, the owner shall submit one (1) complete set of as-built plans and specifications to the Public Works Department accompanied by a letter signed by the engineer of record for the project, certifying that the dam was constructed in accordance with the approved plans and specifications.

Low Hazard dams should be designed according to NRCS Conservation Practice Standard No. 378 “Pond”. This publication is used for Low Hazard dams where the effective dam height times the storage is less than three thousand (3,000). If the criteria of a dam are greater than the above specified condition then the engineer must revert to TR-60.

The Applicant shall provide written notification of completion of any jurisdictional dam to the City, within thirty (30) days after the dam has been constructed. Also, the Applicant shall certify that the dam was constructed as shown in the drawings previously submitted or submit new as-built drawings. If the dam was constructed to accommodate stormwater attenuation, the dam certification shall be included with the certification of the stormwater storage facility discussed in Section 7.4.4 "Stormwater Storage Facility Certification".

Because the size and type of structure used for the principal spillway is one of the most critical elements in the design of High Hazard and Significant Hazard dams, the engineer of record responsible for the project shall provide the Public Works Department with detailed hydraulic, hydrologic, and structural computations supporting the selection of the apparatus to be used. Detailed drawings and specifications relating to the apparatus shall be submitted to the Public Works Department for their review.

6.3.5 Hydrologic/Hydraulic Analysis

For a dam break analysis, the US Army Corps of Engineers (USACE) computer model HEC-RAS should be used. This program simulates a breach, its resulting flood peak, and uses unsteady flow principles to route the flood through the downstream valley.

The top-of-dam elevation should be used for the water-surface elevation at the beginning of the dam break for a "wet-weather" case. The results of the downstream flood routing should be used to establish the limits and plot the inundated areas for emergency conditions associated with the dam break discharge. An inundation map should be created to depict the area that could be flooded should the hypothetical emergency occur. The inundation mapping should be extended downstream to the point at which it falls within the FEMA regulatory floodplain.

Additionally, the NRCS program SITES should be used to route the PMP hydrograph through the dam.

6.3.6 Inspection Guidelines

The inspection guidelines are designed to assist the dam owner to better understand the requirements, responsibilities, and duties inherent with dam ownership and to assist the engineer of record by providing a consistent approach to dam inspection and in-service evaluation. The Public Works Department has created inspection forms, which are located in Appendix Q, to assist the engineer of record in the inspection. The engineer of record will recognize that major portions of the guidelines will not apply to smaller dams, and will use professional judgment in identifying applicable portions of the guidelines to be used in producing a site-specific inspection report. The City shall perform annual, regular inspections on all jurisdictional dams in conjunction with their annual detention pond inspections.

The owner and the operator of a dam shall be responsible for the proper operation and maintenance as well as the structural integrity of the dam. In order to fulfill this responsibility, it is recommended that the owner and/or operator perform a visual inspection of the dam at least every sixty (60) days and after every major rainfall event over the watershed. Any symptoms of dam failure observed during such visual inspections shall be immediately reported to the City and engineer of record.

6.3.7 Types of Inspections

Several different types of dam inspections can be performed including an Informal Inspection, a Regular Inspection, a Formal Inspection and an Emergency Inspection. Dams and appurtenances should be inspected regularly to identify conditions that may adversely affect the safety of a dam and its ability to perform intended functions. An inspection may include the periodic evaluation of the as-built dam to ensure conformity with current design and construction practices. Inspection reports resulting from Formal Inspections of High Hazard and Significant Hazard dams should be submitted to the City within sixty (60) days of the completion of the inspection.

Informal Inspection – The visual inspection of the dam by the dam owner or operator to detect apparent signs of deterioration or other deficiencies of the dam structure or function is recommended to be performed at least every sixty (60) days and after every major rainfall event over the watershed. Informal Inspections require that personnel conducting the inspection be knowledgeable about the dam and it appurtenances. The dam owner or operator can use portions of the inspection form as a guide when inspecting the dam.

Regular Inspection – The City shall perform an annual courtesy inspection on all High and Significant Hazard dams. This inspection will typically coincide with the City's Annual Detention Pond Inspection. During the inspection the City will visually look for any obvious signs of structural weakness, instability or maintenance issues. If a critical item is discovered during the Regular Inspection, a Formal Inspection will likely be required.

Formal Inspection – It is recommended that a Formal Inspection be performed every two (2) to three (3) years. However, if a critical issue is discovered during the City's Regular Inspection, a Formal Inspection will likely be required. The Formal Inspection and performance evaluation of High Hazard and Significant Hazard dams shall be paid for by the owner. The owner shall hire a consultant who is a licensed professional engineer in the State of Alabama to review and determine the safety and integrity of the dam and appurtenant structures. Formal Inspections require a detailed field examination and include a thorough review of the records on project design, construction, and performance. Detailed underwater inspections should be included as needed. The owner shall submit the Formal Inspection to the City for review and final approval. A City approved Emergency Action Plan (EAP) and Operation and Maintenance Manual should be confirmed and their adequacy determined by the dam owner. All addresses and telephone numbers contained within the EAP must be verified and current. Inspection reports shall be deemed incomplete without this information. Technical experts and specialists may be required to evaluate individual features and conditions; however, a licensed professional engineer in the State of Alabama must make the final coordinated evaluation. A review of prior Regular and Formal Inspection reports should be undertaken to evaluate trends in performance.

Emergency Inspection – An Emergency Inspection is an unscheduled inspection of a dam and its appurtenances necessitated by a potentially natural event such as a large flood or earthquake, or when a condition develops that appear to immediately threaten the safety of the dam. An Emergency Inspection is applicable to any hazard classification and requires immediate attention. An Emergency Inspection may trigger a Formal Inspection as deemed

necessary by the City's Dam Inspector.

6.3.8 Emergency Action Plan

The owner of a High Hazard Potential Dam shall develop an EAP that must be approved by the Public Works Department. The following publication should be used as a guideline for developing an EAP:

> FEMA 64 - "Federal Guidelines for Dam Safety: Emergency Action Planning for Dam Owners" April 2004.

An EAP should be formulated for each High Hazard dam. The plan should be to the level of detail warranted by the size and location of the dam and reservoir. It should evaluate downstream inundation hazards resulting from floods or dam failure, and upstream conditions that might result from major land displacements or increased flood flows, including the effects from failure of upstream dams.

The plan should include inundation maps for the flows resulting from design floods and from possible failure of the dam. The complete EAP should be transmitted to the Public Works Department. A review of the plan should be performed concurrent with Formal Inspections and updates made to the plan as recommended by FEMA 64.

This page intentionally left blank.

APPENDIX Q. Visual Inspection Checklist

This page intentionally left blank.

VISUAL INSPECTION CHECKLIST

CITY OF AUBURN
ENGINEERING SERVICES DEPARTMENT

INSPECTION YEAR:

TYPE OF INSPECTION: (**Informal, Regular, Formal**):

DAM NAME:

DAM INVENTORY NO:

LOCATION: __ ¼ of the __ ¼, Section ___, Township____, Range ____, Lee County

OWNER:

OPERATOR:

DATE OF INSPECTION:

RESERVOIR INFORMATION

Normal Reservoir Elevation (ft):

Reservoir Elevation at time of inspection (ft):

WEATHER CONDITIONS **(including recent rainfall):**

INSPECTION PERSONNEL

Alabama Licensed Professional Engineer(s):

Name **Affiliation** **Area of Expertise**

Non-Licensed technical expert(s) and advisors(s):

Name **Affiliation** **Area of Expertise**

City Representative(s):

Name **Affiliation**

Dam Owner Representative(s):

Name **Affiliation**

Others:

Name **Affiliation**

GENERAL INFORMATION

Name of Dam:

River Basin:

Stream Name: **Tributary of:**

Latitude (N): **Longitude (W):**

Purpose of Dam:

Hazard Classification: **Drainage Area (sq. mi.):**

Height of Dam (ft): **Length (ft):**

Normal Surface (ac): **Normal Capacity (ac-ft):**

Maximum Surface (ac): **Maximum Capacity (ac-ft):**

Principal Spillway Capacity (cfs): **Emergency Spillway Capacity (cfs):**

Are the spillway(s) adequate for this classification of dam?

Principal: Yes No

Emergency: Yes No

If not, what percent of the PMP can be passed?

Principal: %

Emergency: %

HISTORY

Date Constructed: **Date(s) Reconstructed:**

Designer: **Constructed by:**

Owner & Address:

Owner Telephone Number:

Owner/Operator present during inspection (yes or no):

PREVIOUS INSPECTIONS **(date of)**

Last Informal Inspection: **Last Regular Inspection:**

Last Formal Inspection:

EMERGENCY ACTION PLAN **(Required for all High and Specified Significant dams)**

Date of Approved Plan:

Date of Plan Revision:

Is the notification flowchart complete and current?

Is inundation mapping included?

Are emergency materials and equipment identified?

When was the plan last tested?

DOWNSTREAM HAZARD CLASSIFICATIONS

Present Hazard Classification:

Changes in Downstream Land Use and Habitation since last inspection:

Is present Classification appropriate?

OPERATION AND MAINTENANCE

Date of Operation and Maintenance Plan:

Are instructions adequate?

Do operating personnel follow instructions?

What are operating personnel capabilities?

EXAMINATION OF EMBANKMENT DAMS

DESCRIPTION OF STRUCTURE

Embankment Material:

Cutoff Type (If Known):

Impervious Core (If Known):

Internal Drainage System:

Movement (Horizontal and Vertical Alignment):

Junctions with Abutments or Embankments:

Miscellaneous:

CREST

Width of Crest:

Erosion on Crest Present:

Surface Cracks:

Settlement:

Unusual Conditions:

UPSTREAM SLOPE

Slope (Estimate) (H:V):

Trees, Undesirable Growth or Debris, Animal Burrows):

Sloughing, Subsidence or Depressions:

Slope Protection:

Unusual Conditions:

DOWNSTREAM SLOPE

Slope (Estimate) (H:V):

Trees, Undesirable Growth or Debris, Animal Burrows):

Sloughing, Subsidence or Depressions:

Surface Cracks or Movement at Toe:

Seepage:

External Drainage System (Ditches, Trenches, Blankets):

Condition Around Outlet Structure:

Unusual Conditions:

GROIN AND TOE AREA

Erosion around Groin Area:

Seepage at Groin Area:

Signs of Movement:

Depressions, Sinkholes:

Unusual Conditions:

SEEPAGE AND TOE DRAIN/RELIEF WELL FLOW SUMMATION

Location **Estimated Flow** **Color (Turbidity)**

EXAMINATION OF SPILLWAYS AND OUTLET WORKS

TYPE(S) AND DESRICPTION OF SPILLWAY(S)

Principal:

Emergency:

Other:

FOR EACH SPILLWAY THE FOLLOWING ASPECTS MUST BE EXAMINED WHERE APPROPRIATE

ENTRANCE CHANNEL

Description:

Vegetation (Trees, Bushes):

Debris:

Channel Side-Slope Stability:

Slope Protection/Erosion:

Unusual Conditions:

SPILLWAY CREST

Description:

Condition of Material:

Signs of Movement:

Joints:

Unusual Conditions:

INLET RISER

Description:

Condition of Material:

Signs of Movement:

Joints:

Floor:

Unusual Conditions:

SPILLWAY WING WALLS

Description:

Condition of Material:

Signs of Movement:

Joints:

Drains:

Unusual Conditions:

DOWNSTREAM APRON

Description:

Condition of Material:

Signs of Movement:

Unusual Conditions:

CONDUITS

Description:

Condition of Material:

Signs of Movement:

Joints:

Seepage:

Location **Estimated Flow** **Turbidity**

Unusual Conditions:

TRASH RACKS

Description:

Condition of Material:

Unusual Conditions:

CHUTES

Description:

Condition of Material:

Signs of Movement:

Joints:

Unusual Conditions:

STILLING BASIN

Description:

Condition of Material:

Signs of Movement:

Erosion:

Unusual Conditions:

OUTLET CHANNEL

Vegetation (Trees, Bushes):

Debris:

Channel Side-Slope Stability:

Erosion:

Unusual Conditions:

LOW LEVEL OUTLET

Description:

Condition:

Trash Rack:

Leakage:

Location **Estimated Flow**

Unusual Conditions:

Was the low-level outlet operated during the inspection?

Were there difficulties operating the low-level outlet?

When was the low-level outlet last operated and did this conform with the Operation and Maintenance Procedures?

Miscellaneous:

EMERGENCY SPILLWAY

Description:

Vegetation (Trees, Bushes):

Debris:

Channel Side-Slope Stability:

Slope Protection/Erosion:

Unusual Conditions:

OTHER SPILLWAY

Description:

Vegetation (Trees, Bushes):

Debris:

Channel Side-Slope Stability:

Slope Protection/Erosion:

Unusual Conditions:

EXAMINATION OF OTHER FEATURES

INSTRUMENTATION (Monumentation/Surveys, Observation Wells, Weirs, Piezometers, Etc.) location, condition:

(A separate report including instrument readings, condition of instruments, observations, and conclusions based upon the collected data should be attached.)

RESERVOIR

Slopes:

Sedimentation:

Unusual Conditions Which Affect Dam:

Unusual Conditions:

APPURTENANT STRUCTURES (Power House, Gatehouse, Penstocks, Water Supply, Other)

Description and Condition of each:

CONCLUSIONS

I certify that the above dam was personally inspected by me and the conditions described herein are correct to the best of my knowledge and belief.

I recommend the following repairs be made immediately:

The following long-term improvements should also be undertaken:

The following studies should also be undertaken:

Have the recommendations above included those from previous Regular or Formal Inspections?

Does the Emergency Action Plan or the Operation and Maintenance Procedures require revision?

Name of Professional Engineering Company/Consultant Representing the Owner:

Company/Consultant Address:

Company/Consultant Telephone Number:

Alabama Licensed Professional Engineer representing the dam owner in responsible charge of the inspection:

Sign_____ Date_____

Alabama Professional Engineer License Number_____

SEAL

(Department use only)

Dam Name_____

Reference No._____ Hazard Classification: ____

This page intentionally left blank.

SECTION 7

7.0 DRAINAGE SECTION

7.1 GENERAL

This section provides stormwater design information for local agencies, engineers, developers, or others whose activities affect stormwater management within the City jurisdictional area. The section will serve as a guide for City Staff, consultants, and citizens to achieve consistency in the design and compliance of stormwater drainage components of projects so that both growth and environmental guidelines can be followed effectively. This section has been prepared to address the following main topics:

- Hydrologic determination of stormwater runoff peak flow and volume;
- Hydraulic design of stormwater conveyance systems;
- Hydraulic design of stormwater storage systems; and
- FEMA requirements.

Submittal requirements are discussed in this Manual in Section 1.3.4 "Development Review Team (DRT)".

7.1.1 City Stormwater Management Manual

The drainage section shall be used in conjunction with the April 2003 City Stormwater Management Manual (SWMM) prepared by CH2M Hill. The SWMM contains methodology, theory, nomographs, figures, and example problems that can be used as guidance to meet design requirements contained in this section. If there are any conflicts between the SWMM and this Manual, this Manual will prevail.

7.1.2 Policy and Criteria

Theoretical information contained in this section is generally presented in basic context and assumes the user has some technical training related to drainage and stormwater management. This section is not intended to function as a "stand-alone" reference and the user is encouraged to utilize additional resources such as the SWMM and hydrologic and hydraulic references.

The user is responsible for following the policies, criteria, procedures, and practices identified in this section and the City's other appropriate Manuals, ordinances, and regulations relevant to drainage design. The user shall utilize his or her knowledge and judgment to hold paramount the safety, health, and welfare of the public.

7.1.3 Environmental Considerations

The increasing focus on nonpoint source pollution and stormwater quality with the amendment of the Clean Water Act in 1987 and subsequent legislation require Alabama communities to address urban stormwater runoff water quality. Numerous federal and

state requirements define what is required of local governments in terms of their local stormwater management programs and related community planning and development efforts.

The Water Resource Management Department is responsible for managing the water, wastewater, and stormwater quality for the City. As such, the Water Resources Management Department has adopted the Water Resource Management Design and Construction Manual (WRM Manual) as the primary guide for development that will receive City and Water Works Board of the City (AWWB) services that fall under the responsibility of the Water Resources Management Department. The WRM Manual contains requirements and criteria for design of erosion and sediment control and post- development stormwater quality best management practices and controls as well as submittal requirements for water quality related stormwater controls. Inspection, operation and maintenance requirements for each stormwater control are also contained in the WRM Manual.

7.1.4 Computer Models

Hydrologic and hydraulic computer models can be utilized for stormwater design and shall use the appropriate methodology as outlined in this Manual.

7.2 STORMWATER HYDROLOGY

The key hydrologic component in design of stormwater conveyance and storage systems is the determination of the volume, time distribution and rate of stormwater runoff for various frequency recurrence intervals. The hydraulic design of a stormwater conveyance system generally requires an estimate of the peak rate of runoff generated by the design event. In the following sub-sections, information will be provided to determine design storm data for the City such as excess precipitation, volume of runoff and peak discharge flow rates.

Hydrologic analyses are a fundamental component in the design of stormwater management facilities, such as stormwater drainage systems and structural stormwater controls. The hydrologic analysis consists of a number of variables that affect the nature of stormwater runoff and include:

- Rainfall amount and storm distribution;
- Drainage area size, shape and orientation;
- Ground cover and soil type;
- Slopes of terrain and stream channel(s);
- Antecedent moisture condition;
- Storage potential (floodplains, ponds, wetlands, reservoirs, channels, etc.);
- Watershed development potential; and
- Characteristics of the local drainage system.

The following methods presented in this section shall be used for hydrologic analyses:

- Rational Method [for drainage areas less than ten (10) acres and time of concentration of less than fifteen (15) minutes only];
- NRCS Unit Hydrograph Method (Curve Number Methodology); and
- U.S. Geological Survey (USGS) Regression Equations (with prior approval from the City Engineer).

These methods were selected based upon the availability of equations, nomographs, and computer programs and are typically used in hydrologic analyses.

7.2.1 Rainfall Estimation

For the determination of peak flow rates and volume of stormwater runoff required to size stormwater management facilities, design storms for the City must be utilized. Design rainfall intensities in inches per hour for a given return period and time of concentration are shown in Table 7.1. Table 7.2 contains the depth of rainfall in inches that corresponds to a 24-hour rainfall event for a given return period.

The design storm frequency for roadway drainage and stormwater management facilities within the City is based on achieving a balance between construction costs, maintenance

needs, traffic volume, potential flood hazard to adjacent property, and anticipated level of service.

TABLE 7.1
Rainfall Intensity for Auburn, Alabama

Return Period	Rainfall Intensity (inches/hour)										
	5 Min	6 Min	7 Min	8 Min	9 Min	10 Min	11 Min	12 Min	13 Min	14 Min	15 Min
2-Year	6.2	5.9	5.8	5.6	5.4	5.2	5.1	4.9	4.7	4.5	4.5
5-Year	7.1	6.8	6.6	6.5	6.3	6.0	5.9	5.7	5.5	5.3	5.1
10-Year	7.7	7.5	7.3	7.1	6.9	6.5	6.4	6.3	6.1	5.8	5.6
25-Year	8.7	8.5	8.2	8.0	7.8	7.4	7.3	7.1	6.8	6.6	6.3
50-Year	9.4	9.1	8.9	8.6	8.4	8.1	7.9	7.7	7.4	7.2	6.9
100-Year	10.2	9.8	9.6	9.3	9.0	8.8	8.5	8.2	8.0	7.7	7.6

TABLE 7.2
Rainfall Volume for Auburn, Alabama

Return Period	24 Hour Rainfall Depth (inches)
2-Year	4.2
5-Year	5.4
10-Year	6.3
25-Year	7.2
50-Year	8.1
100-Year	9.0

7.2.2 Rational Method

The Rational Method shall only be used to determine peak flows for design of roadway drainage systems such as curb and other drainage inlets and storm sewer pipes used as part of the roadway drainage system. The maximum drainage area to be used with the rational method shall be ten (10) acres; maximum time of concentration shall not exceed fifteen (15) minutes; and minimum time of concentration shall not be less than five (5) minutes. Runoff coefficients for use in the Rational Method can be found in Table 7.3 and rainfall intensities can be found in Table 7.1.

$$Q_p = CIA$$

Where:
- Q_p = peak rate of runoff in cfs for selected frequency event
- C = runoff coefficient (dimensionless)
- I = rainfall intensity in inches per hour for selected frequency event (NRCS methodology as discussed in Section 7.2.3 "NRCS Curve Number Methodology" shall be used to compute the time of concentration for determination of rainfall intensity)
- A = drainage area in acres

TABLE 7.3
Rational Runoff Coefficients

Land Use	Runoff Coefficient
Full Impervious	0.90
Permeable Pavement	0.70
Gravel Parking	0.70
Clay/Gravel Road	0.75
Urban District	0.82
Commercial/Industrial	0.75
Woods	0.35
Pasture, Lawns, Open Spaces With good grass cover	0.35
Residential	
1 Acre (20% Impervious)	0.45
1/2 Acre (25% Impervious)	0.49
1/3 Acre (30% Impervious)	0.53
1/4 Acre (40% Impervious)	0.60
1/8 Acre (65% Impervious)	0.71

7.2.3 NRCS Curve Number Methodology

NRCS Curve Number methodology shall be used for all components of stormwater management design with volume and storage requirements or to determine peak flows for hydraulic design of cross drains and other stormwater storage and conveyance systems for drainage areas greater than ten (10) acres. The Rational Method shall be used for hydraulic design of roadway drainage systems but not to develop hydrographs for design of stormwater storage facilities.

Nearly all soils within the City are Hydrologic Group B soils (Soil Survey of Lee County). These soils have a moderately low runoff potential due to high infiltration rates even when the soils are saturated. The B soils consist primarily of moderately deep to deep, moderately well to well drained soils with moderately fine to moderately coarse textures (shallow loess, sandy loam). Impervious percentages shown in Table 7.4 assume the impervious areas are directly connected to the drainage system. Representative Curve Numbers for type B soils are shown in Table 7.4.

TABLE 7.4
TR-55 Curve Numbers

Land Use	Curve Number (CN) Hydrologic Soil Group B
Full Impervious	98
Permeable Pavement	85
Gravel Parking	85
Clay/Gravel Road	89
Urban District	92
Commercial/Industrial	88
Woods	60
Pasture, Lawns, Open Spaces Poor Condition (grass cover less than 50%)	79
Pasture, Lawns, Open Spaces Fair Condition (grass cover 50% to 75%)	69
Pasture, Lawns, Open Spaces Good Condition (grass cover greater than 75%)	61
Post Development Landscape Areas	69
Paved Open Ditches	89
Bare Dirt	82
Newly Graded Area (pervious without vegetation)	86
Residential	
2 Acres (12% Impervious)	65
1 Acre (20% Impervious)	68
1/2 Acre (25% Impervious)	70
1/3 Acre (30% Impervious)	72
1/4 Acre (40% Impervious)	76
1/8 Acre (65% Impervious)	85

7.2.4 United States Geological Survey Regression Equation

The USGS equations shall only be used with prior approval from the City Engineer. If approved, the USGS equation for peak discharges in urban areas for hydrologic Region 3 as shown below shall be used. The USGS urban equation is applicable for drainage areas from 0.16 to 83.5 square miles with a percent range of impervious areas from 8.3 to 42.9.

Exceedance Probability (percent)	Urban Regression Equations
50	$Q = 95A^{0.648}\ PD^{0.407}$
20	$Q = 226A^{0.670}\ PD^{0.298}$
10	$Q = 306A^{0.675}\ PD^{0.276}$
4	$Q = 417A^{0.670}\ PD^{0.253}$
2	$Q = 513A^{0.663}\ PD^{0.237}$
1	$Q = 618A^{0.656}\ PD^{0.223}$
0.5	$Q = 733A^{0.650}\ PD^{0.210}$
0.2	$Q = 897A^{0.642}\ PD^{0.196}$

Where: Q = peak flow in cfs
A = contributing drainage area in square miles
PD = percent developed

Figure 7.1 is a flow chart that shall be followed when determining the peak rate of stormwater runoff for projects within the City's jurisdiction.

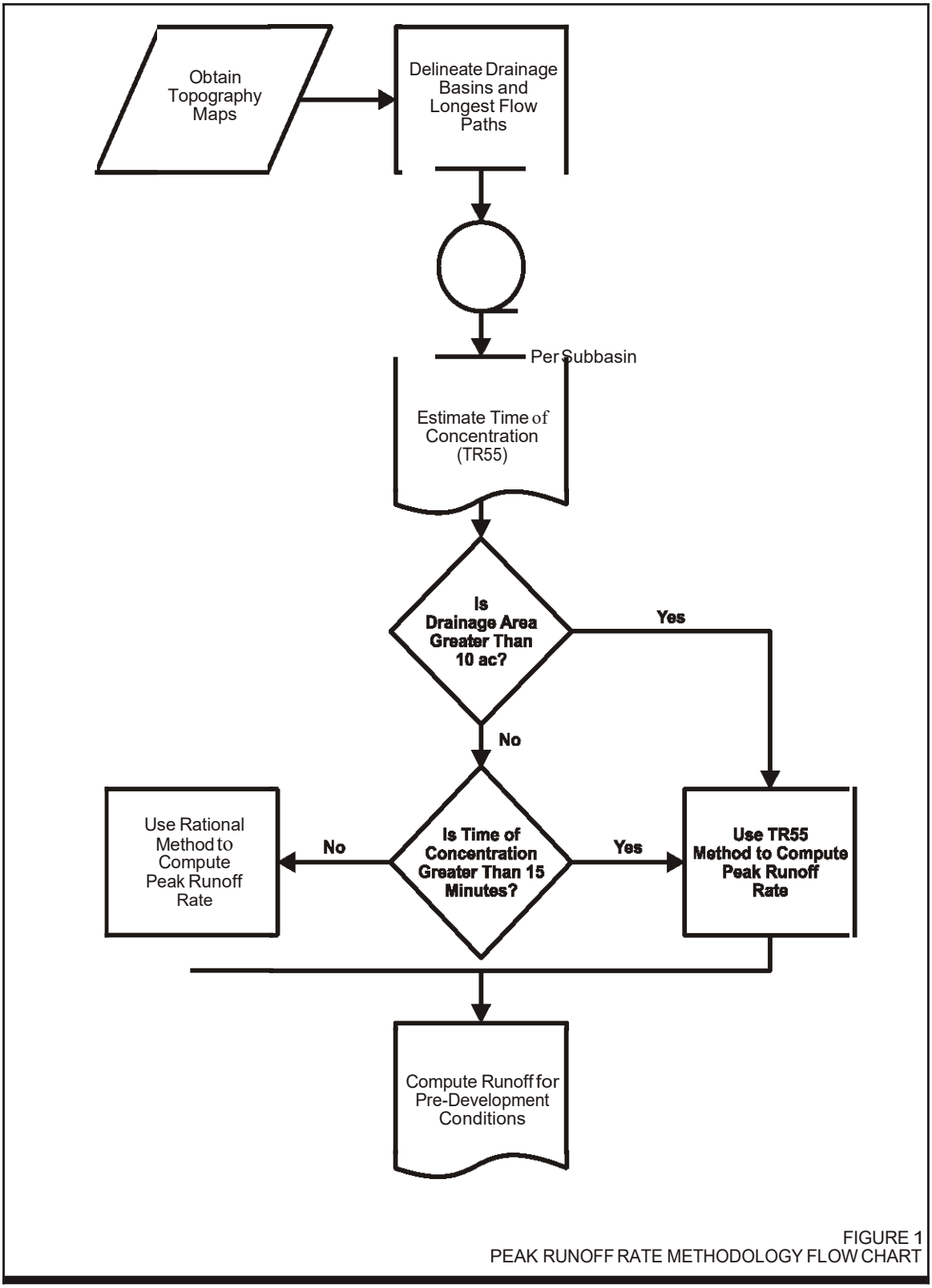

FIGURE 7.1
Peak Runoff Rate Methodology Flow Chart

7.2.5 Permeable Pavement

Permeable pavement also referred to as porous or pervious pavement is a special type of pavement that allows rainfall to pass through it, reducing the amount of stormwater runoff from a site. In addition, permeable pavement filters some pollutants from stormwater runoff if the pavement is properly maintained.

Permeable pavement slopes shall be flat or very gentle [not greater than five (5%) percent]. Permeable pavements are not recommended for parking lots or other traffic areas with a large percentage of turning movements. Design guidance, monitoring, maintenance, and additional information on permeable pavement can be found in the WRM Manual.

A curve number of eighty-five (85) for HSG B shall be used as the curve number for areas covered with permeable pavement within the City. A rational runoff coefficient of seven-tenths (0.70) shall be used for permeable pavement for projects where the rational equation is applicable.

7.2.6 Time of Concentration

Time of concentration in hydrologic modeling is defined as the longest travel time for rainfall runoff in a basin to reach the point of interest. Time of concentration (T_c) shall be computed using the NRCS method, which utilizes three (3) components for travel time: sheet flow (T_{t1}), shallow concentrated (overland) flow (T_{t2}), and open channel flow (T_{t3}). A minimum time of concentration of five (5) minutes shall be used.

The following equation shall be used to compute the sheet flow component of the time of concentration:

$$T_{t1} = \frac{0.007(nL)^{0.8}}{(P_2)^{0.5}\, s^{0.4}}$$

Where:
- T_{t1} = time (hr)
- n = Manning's roughness coefficient (dimensionless)
- L = length (ft) (assumed 100 feet max.)
- P_2 = 2-year, 24-hr rainfall (4.2 inches)
- s = slope (ft/ft)

A maximum distance of one hundred (100) feet shall be utilized for sheet flow before it is assumed that the flow becomes shallow concentrated.

Shallow concentrated flow is typically computed from log function curves for flow over paved and unpaved surfaces. Additional curves as defined in Hydrology and Hydraulic Systems (Gupta, 1989) can be used to determine the velocity used to calculate the shallow concentrated flow component of the time of concentration, as shown in Figure 7.2.

Once the velocity is determined for the shallow concentrated flow component, the following equation shall be used to compute the time of concentration component for shallow concentrated flow:

$$T_{t2} = \frac{L}{V}$$

Where: L = distance of overland flow (ft)
V = average overland velocity (fps)

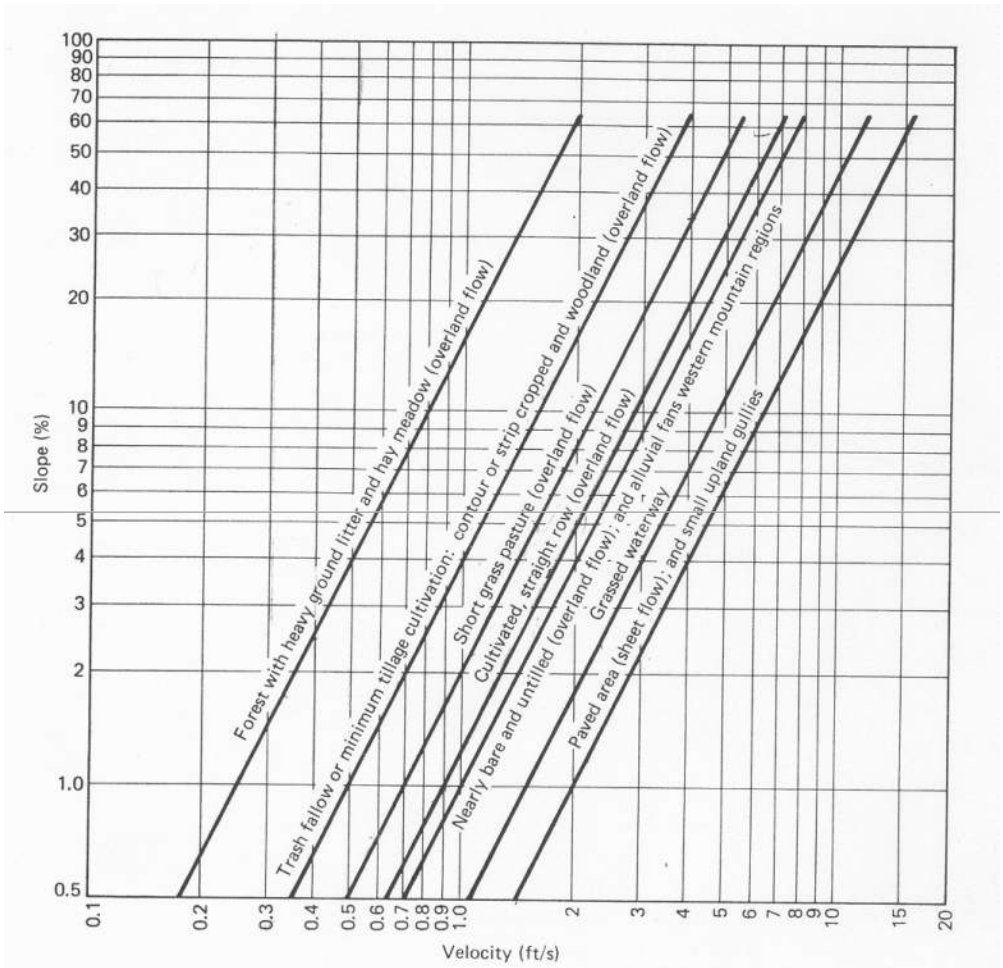

Figure 12.7 Average velocity of overland flow (from U.S. SCS, 1975b).

FIGURE 7.2
Average Velocity of Overland Flow (Gupta, 1989)

The open channel flow component for the time of concentration shall be determined by utilizing cross section geometry for an average (representative) cross section for this flow component. Using the Manning's roughness coefficient, the Manning Equation for open channel uniform flow, as shown below, shall be utilized to determine the average channel velocity for this component of the time of concentration.

$$V = \frac{1.49\ R^{0.67}\ S^{0.5}}{N}$$

Where: V = average channel velocity (fps)
R = hydraulic radius (ft)
S = channel slope (ft/ft)
n = Manning's roughness coefficient (dimensionless)

Once the velocity was determined for this component, the following equation shall be used to compute the time of concentration for the open channel flow component:

$$T_{t3} = \frac{L}{V}$$

The following equation shall then be used to compute the total time of concentration at the point of interest:

$$T_c = T_{t1} + T_{t2} + T_{t3}$$

7.2.7 Stormwater Runoff Hydrographs

Hydrographs for design storms can be generated in most hydrologic software. Design storms used to design stormwater management facilities in the City shall use 24-hour duration storms and a NRCS Type II rainfall distribution. Rainfall depths for 24-hour duration frequency events are listed in Table 7.2.

NRCS Curve Number methodology shall be used to design all components of stormwater management systems with volume and storage requirements or to determine peak flows for hydraulic design of cross drains and other stormwater conveyance systems for drainage areas greater than ten (10) acres. Hydrographs determined by the Rational Method shall never be used for design or analysis.

7.2.8 Routing of Stormwater Runoff Hydrographs

Routing of stormwater runoff hydrographs simulates how stormwater runoff from a sub-basin is attenuated as it moves from the sub-basin to a designated point downstream in the watershed. Once a design storm hydrograph has been determined for a particular watershed, it may be necessary to route that hydrograph to another point in the drainage system. This process is generally known as flood routing. Hydrologic and hydraulic flood routing techniques are available to quantify peak flow attenuation and time lag that is likely to occur as this hydrograph travels through a drainage system.

Hydrologic routing considers only the conservation of mass, whereas hydraulic routing considers both the conservation of mass and equations of motion. In practice, hydrologic routing techniques usually are adequate for design of stormwater management

systems. The Muskingum technique of hydrologic channel routing is recommended when computer-based procedures are not used.

Hydrologic or hydraulic flood routing techniques may be further categorized depending on the type of stormwater system being designed. The two (2) categories of stormwater systems that require unique flood routing techniques for design are open channel and reservoir systems.

Table 7.5 contains guidance for selection of the appropriate routing technique for channel routing.

TABLE 7.5
Routing Techniques for Channels

Channel Reach	Routing Technique
No observed hydrograph data available for calibration	Kinematic-Wave Muskingum-Cunge
Backwater will influence Hydrograph	Modified Puls
Flood stages will overtop bank into floodplain	Modified Puls Muskingum-Cunge with 8-point cross section

7.2.9 Hydrologic Analysis for Design of Storm Sewer Systems

In general, storm sewer systems are sized to carry stormwater intercepted by appropriate inlet facilities. However, if the intercepted runoff is transported through an extensive pipe network, channel storage within the storm sewers can modify the peak rate of runoff as it travels along the system. The peak flow modification can be evaluated with hydrologic channel routing procedures discussed in Section 7.2.7 “Stormwater Runoff Hydrographs”.

For small projects, the Rational Method can be used to perform hydrologic calculations for storm sewer systems. In general, as the time of concentration, drainage area, and variability in land use increase, more complex procedures are warranted. In addition, the size and complexity of the storm sewer system shall be considered. The Rational Method shall only be used for design applications described in Section 7.2.2 “Rational Method”.

7.3 STORMWATER DRAINAGE SYSTEM DESIGN

The purpose of this section is to identify procedures, which are applicable within the City to design various components of the stormwater drainage system. The procedures require development of appropriate hydrologic data such as peak flow and volume to use in the hydraulic design process.

The stormwater system must be designed to provide adequate drainage while at the same time meet other stormwater management requirements such as water quality, prevention of erosion of channel banks, sediment deposition, habitat protection and groundwater recharge.

For procedures, processes, and requirements outlined in this section, analyses must be conducted all the way downstream to the first City-maintained stormwater structure and other comparison points as discussed in Section 7.4.1 "Comparison Points". During design stormwater flows, the structures and stormwater conveyance system currently in place must meet their current level of service. If the added design stormwater runoff peak and volume from a development compromises or reduces existing level of service of the existing stormwater management infrastructure, necessary steps must be taken to improve or maintain the existing level of service.

The design frequencies shown in Table 7.6 are the minimum for design of roadway drainage systems that will achieve this balance for various road classifications within the City.

TABLE 7.6
Roadway Design Frequency

Roadway Drainage Component	Arterial	Collector	Residential Collector	Local Commercial	Local Residential	Cul-de-sac	Alley	Marginal Access Roadway
Curb and Road Inlet	25-year	25-year	10-year	10-year	10-year	10-year	10-year	10-year
Roadway Storm Pipe System	25-year	25-year	10-year	10-year	10-year	10-year	10-year	10-year
Culvert Cross Drains	25-year	25-year	25-year	25-year	25-year	25-year	25-year	25-year
	(check for 100-yr)	(check for 100-yr)	(check for 100-yr)	(check for 100-yr)	(check for 100-yr)	(check for 100-yr)	(check for 100-yr)	(check for 100-yr)
Roadway Ditch	25-year	25-year	25-year	25-year	25-year	25-year	25-year	25-year

[1] Headwater for the 100-year flood shall not overtop road

7.3.1 Stormwater Drainage System Components

Stormwater drainage systems can be classified as minor or major systems. Three considerations should be considered in design of these systems: flooding, public safety and water quality.

The minor drainage system is designed to remove stormwater from areas such as streets and sidewalks for public safety considerations. This drainage system typically consists of inlets, street and roadway gutters, roadside ditches, small channels and swales, and small underground storm sewer pipe systems which collect stormwater runoff from roadways, parking lots, and sidewalks and transport it to stormwater management facilities, pervious areas and/or the major drainage system (i.e., natural waterways, large man-made conduits, and large water impoundments).

The major drainage system consists of natural waterways and large stormwater storage facilities.

The following sections provide design criteria and guidance for the minor and major stormwater drainage systems.

7.3.2 Gutter Flow Calculations

Generally, gutter flow calculations are used to make sure that water will not cover the street. This type of flooding can be controlled by including more inlets. Also note that inlets often do not capture one hundred (100%) percent of the flow, and downstream gutters must include this bypass flow.

7.3.3 Curb Opening Inlets

Curb opening inlets are relatively free of clogging problems and offer little interference to traffic operation. Flow capacities for single wing inlets on a continuous slope are shown in Table 7.7. The capacities are based on the City Standard Details for Streets and Storm Drain. The table contains capacities for various continuous longitudinal slopes for both intercepted flow in cubic feet per second (cfs) and bypass flow in cfs. Capacities are based on the standard street cross section for curb and gutter with a manning's "n" value of sixteen- thousandths (0.016) and an allowable spread of seven and one-half (7.5) feet. Capacities for single wing inlets are based on a minimum curb opening length of thirteen (13) feet and a gutter depression of four (4) inches. All inlet capacities were determined using the FHWA program Urban Drainage Design Program HY-22.

TABLE 7.7
Single Wing Inlet Capacities on a Continuous Slope

Longitudinal Slope (percent)	Intercepted Flow (cfs)	Bypass Flow (cfs)
0.2	0.6	0
0.5	0.9	0
1.0	1.3	0
1.5	1.6	0
2.0	1.8	0
2.5	2.0	0
3.0	2.2	0
3.5	2.4	0
4.0	2.6	0
4.5	2.7	0
5.0	2.8	0.1
6.0	3.0	0.2
7.0	3.1	0.3
8.0	3.2	0.4
9.0	3.3	0.6
10.0	3.4	0.7

The City standard double wing inlet located in a sag section has a capacity of eleven and six-tenths (11.6) cfs with an allowable spread of seven and one-half (7.5) feet.

The design of roadway drainage systems shall limit the number of discharge locations. The City will require that the number of discharge locations be condensed to the maximum extent practicable. The roadway drainage system shall be designed such that the runoff is directly discharged into stormwater storage facilities or natural drainage features. Where discharge of stormwater is required to occur between lots, storm sewer pipe shall be installed to the rear setback line. If proposed or existing structures are shown on the design plans, the pipes shall be extended ten (10) feet past the rear of the building.

7.3.4 Design Frequency and Spread

Two of the more significant variables that should be considered in the design of roadway pavement drainage are the frequency of the design runoff event and allowable spread of water on the pavement. Table 7.8 lists the allowable spread and design requirements for City road classifications.

The recommended design frequency for depressed sections and underpasses where water can pond and only be removed through the storm drainage system is a 50-year frequency event.

TABLE 7.8
Allowable Spread

Road Classification	Design Frequency	Design Spread
Arterial	25-year	One-half travel lane
Collector	25-year	One-half travel lane
Residential Collector	10-year	7.5 feet
Local Commercial	10-year	7.5 feet
Local Residential	10-year	7.5 feet
Cul-de-sac	10-year	7.5 feet
Alley	10-year	One-half width of alley
Marginal Access Roadway	10-year	One-half travel lane

Traffic could be unduly disrupted if a sag inlet were to become clogged. Thus the designer should consider locating flanking inlets on each side of the storm structure at the low point of the sag. The inlet spacing design at the sag is performed in two (2) steps. First, the inlet spacing is determined without consideration of the flanking inlets. Because these inlets are considered a backup to the inlet at the actual sump point, the inlet spacing computations should proceed as if these inlets were not present.

Allowable gutter capacity data for the City standard curb and gutter sections are presented in Table 7.9 for various longitudinal slopes with an allowable spread of seven and one-half (7.5) feet. The allowable gutter capacity shall be determined directly from Table 7.9 when computing gutter spread for the street classifications illustrated. The allowable spread of one-half travel lane shall be used for all other street classifications not illustrated in Table 7.9 The City will require detailed gutter capacity design data be submitted as part of the drainage report when designing the drainage for collector and arterial facilities.

TABLE 7.9
Gutter Capacities for Standard Curb and Gutter Sections

Longitudinal Slope In Percent	Cul-De-Sac/ Local Residential	Local Commercial	Residential Collector/Collector (Pavement Width = 27 feet)
0.2	0.6	0.6	0.6
0.5	0.9	0.9	0.9
1.0	1.3	1.3	1.3
1.5	1.6	1.6	1.6
2.0	1.8	1.8	1.8
2.5	2.0	2.0	2.0
3.0	2.2	2.2	2.2
3.5	2.4	2.4	2.4
4.0	2.6	2.6	2.6
4.5	2.7	2.7	2.7
5.0	2.9	2.9	2.9
6.0	3.2	3.2	3.2
7.0	3.4	3.4	3.4
8.0	3.7	3.7	3.7
9.0	3.9	3.9	3.9
10.0	4.1	4.1	4.1

TABLE 7.10
Gutter Capacities in Cubic Feet per Second for Roll Curb and Gutter Section

Longitudinal Slope In Percent	Gutter Capacities (cfs)
0.2	0.5
0.5	0.8
1.0	1.1
1.5	1.3
2.0	1.6
2.5	1.7
3.0	1.9
3.5	2.1
4.0	2.2
4.5	2.3
5.0	2.4
6.0	2.7
7.0	2.9
8.0	3.1
9.0	3.3
10.0	3.5

7.3.4.1 Roadway Inlets

The appropriate return period should be used for design of roadway pavement drainage components. Curb and gutter flow characteristics, including spread, for roadways shall be calculated using an appropriate Manning's “n” value, 0 0.016 for asphalt, for the roadway surface.

The design of pavement cross slope on residential streets will conform to the standard roadway sections provided in the City’s standard drawings or ALDOT standard drawings, as applicable.

Rolled curbs are sometimes used in residential areas because they avoid curb cuts for driveways and allow runoff to flow onto adjacent pervious areas. These gutters must also convey the required design storm with spread limited to one-half (0.5) of a driving lane.

7.3.4.2 Inlet Spacing

Curb inlets shall be located to facilitate the entrance of water from gutters into the storm sewer system. Inlets will be located or spaced so that the spread criteria are met.

Consideration also must be given to the movement of vehicles to and from adjacent property on turnouts and maintenance of safe pedestrian walkways. All flow will be collected in inlets prior to reaching intersections.

7.3.5 Bridge Decks

Because of difficulties in providing and maintaining adequate deck drainage systems, gutter flow from roadways will be intercepted before it reaches a bridge. Drainage of bridge decks shall be based on the 25-year recurrence interval and shall be included with the bridge plans.

7.3.6 Storm Sewer Pipes

For all hydrologic and hydraulic design and calculations of storm sewer pipes, refer to Table 7.6, unless facilities are under the jurisdiction of the ALDOT. ALDOT requires a 50-year storm return period to be used for design. Only reinforced concrete pipe (RCP) shall be used under roadway surfaces. Corrugated metal pipe shall not be used as part of the drainage system.

7.3.6.1 Manning's "n" Values

Values for Manning's roughness coefficients for various pipe materials are shown in Table 7.11.

TABLE 7.11
Roughness Coefficients for Storm Sewer Pipes

Pipe Material	Manning's "n" Roughness Coefficient
Reinforced Concrete (pipe or box)	0.013
Cast-In-Place Concrete Box	0.013
High Density Polyethylene* (with smooth liner)	0.013

*HDPE pipes shall not be used under roadways but can be used in other locations.

7.3.6.2 Slopes and Hydraulic Gradient

The maximum and minimum slopes for storm sewers will conform to the following criteria:

1. Maximum hydraulic gradient will not produce a velocity that exceeds fifteen (15) feet per second (higher velocities require approval from the City Engineer).
2. Minimum desirable physical slope will be the slope that results in a minimum velocity of two and one-half (2.5) feet per second for the design event when the storm sewer is flowing full.

Elevation of the hydraulic gradient for design flow conditions shall be at least one (1) foot below the gutter elevation when minor energy losses are not considered in the design. When minor losses are considered, the design hydraulic gradient can reach the gutter

elevation. Hydraulic calculations shall be included as part of the drainage calculations submittal with the hydraulic gradient shown graphically. Energy losses are discussed in Section 3.2.4.2 "Hydraulic Calculations – Energy Losses" of the SWMM.

7.3.6.3 Storm Sewer Pipe Size, Length and Access Spacing

Access spacing is the point in the pipeline where there is access available from the surface, such as a manhole or inlet. Access spacing shall not exceed five hundred (500) feet for pipes less than fifty-four (54) inches in diameter and shall not exceed eight hundred (800) feet under any circumstances. The minimum pipe size shall be fifteen (15) inches. Standard pipe size increments of six (6) inches will be used for pipes larger than eighteen (18) inches.

The minimum box culvert size will be three by three (3 x 3) feet for pre-cast units and four by four (4 x 4) feet for cast-in place units. Increments of one (1) foot in the height or width will be used above this minimum. The "span by height" format shall be used for reporting box culvert dimensions. For example, for the dimension ten by seven (10 x 7) feet, the span is ten (10) feet wide and the height is seven (7) feet.

7.3.6.4 Minimum Clearances

Minimum clearances for storm sewer pipe will comply with the following criteria:

1. For the minimum spacing required between road base material and the outside crown of the storm sewer pipe, refer to the City Standard Details.

2. For utility conflicts that involve crossing a storm sewer alignment, the minimum design vertical clearance between the outside of the pipe and the outside of any conflicting utility shall be one-half foot if the utility has been accurately located by subsurface utility engineering (SUE) at the point of conflict. If the utility has been approximately located, the minimum design clearance shall be one (1) foot. Electrical transmission lines, water or gas mains shall never come into direct contact with the storm sewer.

3. Storm sewer systems shall not be placed parallel to or below existing utilities in a manner that could cause utility support problems. The horizontal clearance between stormwater pipes shall be three (3) feet. Storm sewer junction boxes and inlet boxes shall have a minimum horizontal clearance of two (2) feet from other utilities.

4. When a sanitary line or other utility must pass through a manhole, a minimum one (1) foot clearance shall be maintained between the bottom of the utility and the flow line of the storm main, and maximum practicable clearance is recommended. Flow will be less obstructed when the utility is placed above or as close as possible to the crown of the pipe and shall be no lower than the top one-third of the pipe. The head loss caused by an obstruction shall be taken into account. Gas and water mains must not pass through inlet and manhole structures. The City will not typically approve conflict boxes for concurrent installation of new sanitary and storm sewer infrastructure. Conflict boxes must receive approval from the Water Resources Management Department for sanitary sewer applications.

Sanitary sewer lines that are permitted in storm sewer boxes shall be ductile iron pipe and a joint of pipe shall be centered in the conflict box.

7.3.7 Roadside Ditches

This section presents standards for design of artificial or manmade open channels, including roadside, non-roadside, median, and interceptor ditches, outfalls, and canals.

7.3.7.1 Design Criteria

Ditches, outfalls, detention areas, and other drainage-related features must be provided with berms and other physical access devices that allow maintenance activities.

The maximum allowable side slopes for open channels are as follows:

- Vegetated Residential – 4:1;
- Vegetated Non-residential – 3:1; and
- Riprap–2:1.

A minimum physical slope of one and one-half (1.5%) percent will be used unless otherwise authorized by the City Engineer.

Design documentation for open channels will include the hydrologic analysis and hydraulic analysis, including analysis of channel lining requirements.

Open channels will be designed to convey, without damage, peak flow from a 25-year recurrence interval storm event utilizing the Manning's equation.

The freeboard of an open channel is the vertical distance measured from the 25-year water surface to top of the channel banks. Freeboard is provided to ensure that the desired degree of protection will not be reduced by unaccounted for factors such as future upstream development; unforeseen embankment settlement; accumulation of silt, trash, and debris; aquatic or other growth in the channel; and variation of channel roughness or other coefficients from those assumed in design. Freeboard cannot be set based on a single formula but shall be based on size and geometry of the channel; type of channel lining; consequences of damage resulting from channel overtopping; and velocity and depth of flow.

As stated previously, the basic equation for design of open channels is Manning's Equation:

$$v \quad \frac{1.49}{n} R^{2/3} S^{1/2}$$

or

$$Q \quad \frac{1.49}{n} A R^{2/3} S^{1/2}$$

where:

V = average channel velocity, feet/second

Q = average channel flow, cfs

n = Manning's roughness coefficient (provided in Tables 3-1 "Recommended Manning "n" Values For Channels With Bare Soil And Vegetative Linings" and 3-2 "Recommended Manning "n" Values For Channels With Rigid And Semi-Rigid Lining" of the SWMM)

R = hydraulic radius of the channel, ft (area below water surface/wetted perimeter below water surface)

S = slope of the channel bottom, ft/ft

The submittal information for design of open channels shall include graphical representation of the design water surface elevation, cross sections at critical locations and intervals, and maximum average velocity for the 25-year peak flow.

Design of open channels must include an evaluation of channel lining. Maximum velocities for various forms of channel linings are provided in Table 7.12. Grass and sod shall not be used if there is continuous standing or flowing water in the ditch that prohibits grass growth. The design will be reviewed to evaluate whether some form of protective treatment will be required to prevent entry to any ditches that present a hazard to children and, to a lesser extent, all persons. Protective treatment for open channels in the form of fencing will be considered when a potential hazard exists. The design and location of open channels will comply with roadside safety and clear zone requirements.

TABLE 7.12
Maximum Velocities for Various Channel Linings

Material	Maximum Velocity (feet per second)
Silt or fine sand	1.50
Loam	1.75
Stiff Clay	3.75
Grass	3.00
Sod	4.00
Rigid [1]	10.00
Geotextile grid [2]	4.00-8.00

1. Higher velocities may be acceptable for rigid linings if appropriate data is available and provisions for energy dissipation is provided
2. Varies with grid type

7.3.8 Culverts

A culvert conveys water underneath roads, railroads, and embankments. In addition to this hydraulic function, it must also carry construction and highway traffic and earth loads; therefore, culvert design involves both hydraulic and structural design. The hydrologic and hydraulic design of culverts is addressed in this section. The hydraulic design must prevent risks to traffic, property damage, and failure from floods and include sound engineering practice and economics. This section describes hydraulic aspects of culvert design,

construction and operation of culverts, and makes references to structural aspects only as they are related to hydraulic design.

7.3.8.1 Discharge

The design discharge for culverts is based on the 25–year recurrence interval for culverts handling drainage from primarily the internal facilities of the development. For culverts designed to accept drainage from upstream areas outside of the development, the City requires that the Applicant determine design flows for the entire upstream area. Furthermore, if the design storm is increased by the development for any recurrence interval, the Applicant must conduct calculations further downstream to, at least, the first City-maintained stormwater management facility. New development must not have adverse impacts on City stormwater management facilities.

There shall not be any overtopping of roadways for the 100-year recurrence interval. If ponding occurs at the culvert entrance and a reduction in discharge downstream occurs as a result of storage effects, reservoir routing calculations shall be used to determine the reduction in peak flow.

7.3.8.2 Culvert Material

All culverts shall be constructed using reinforced concrete pipe unless otherwise approved by the City Engineer.

7.3.8.3 Length and Slope

The following factors related to length and slope of the culvert shall be evaluated:

1. Channel invert of the stream being conveyed
2. Geometry of the roadway embankment
3. Skew angle of the culvert

In general, the culvert slope shall be chosen to approximate the existing streambed slope.

7.3.8.4 Velocity Limitations

A minimum velocity of two and one-half (2.5) feet per second when the culvert is flowing full is recommended to ensure a self-cleaning condition during partial depth flow. When velocities below this minimum are anticipated, installation of a sediment trap upstream of the culvert is required.

7.3.8.5 Outlet Protection

Transitions from culverts, pipes or other outlet structures to natural channel systems that create high velocities or excessive flow conditions must be mitigated with outlet protection measures. Culverts, pipes, or other outlet structures within the clear zone shall include a sloped headwall unless determined by the engineer that one is not warranted.

The design velocity at any stormwater management system outlet shall not result in velocities that equal or exceed the erosive velocity of the receiving channel, unless energy dissipation and permanent erosion protection measures are placed at the outlet. Energy and outlet dissipation shall discharge onto stable channel sections. If velocities exceed permissible velocities for the channel lining, outlet protection is required.

Table 7.13 can be used as general guidance in the selection of the appropriate protection for culvert outlets based on outlet velocity.

TABLE 7.13
General Guidance for Selection of Outlet Protection

Velocity (feet per second)	Type of Outlet Protection
Less than 5.0	Generally protection not required (may need to provide protection if channel is highly erodible)
5.0 to 12.0	Riprap apron
12 to 20	Baffled outlet
Greater than 20.0	Impact basin

Additional detailed documentation and guidance on the selection and design of outlet protection for culverts can be in FHWA publication HEC-14 "Hydraulic Design of Energy Dissipators for Culverts and Channels".

7.3.8.6 Design Calculations

A flow chart for performing culvert design calculations is provided in Figure 3-7 and a worksheet for performing calculations for standard culvert design is provided in Figure 3-8 "Culvert Design Form" of the SWMM. The methodology and procedures for standard culvert design is discussed in Section 3.4.5 "Culverts – Design Calculations" of the SWMM.

The allowable headwater elevation is determined from an evaluation of conditions upstream of the culvert and proposed or existing roadway elevation. The following criteria shall be analyzed:

1. Non-damaging or permissible upstream flooding shall be identified. Headwater shall be kept below these elevations.

2. Headwater depth for the design discharge shall not overtop the road.

3. Headwater depth for the design discharge(s) shall not cause water to rise above the top of approach channels adjacent to improved land and shall not exceed the existing conditions 100-year flood elevation.

4. Other site-specific design constraints shall be addressed as required. The constraint that gives the lowest allowable headwater elevation will establish the basis for hydraulic calculations.

7.4 HYDRAULIC DESIGN OF STORMWATER STORAGE SYSTEMS

Types of stormwater storage facilities that are appropriate in the City jurisdictional area are identified in this section. In addition to the types of storage, general design considerations, flow control structures, and methodology for conducting storage reservoir routing are addressed.

Peak discharges and runoff volumes for all recurrence intervals must be evaluated at the first downstream City-maintained stormwater management facility and other comparison points, discussed in Section 7.4.1 "Comparison Points" so that structures and stormwater management system currently in place are not flooded or the existing level of service is compromised. If the increase in peak stormwater discharge or runoff volume compromises the current structures and system, necessary steps must be taken to mitigate the increase in peak flow or runoff volume.

Detention pond provisions of this section typically do not apply to developments of less than one (1) acre. Certain developments less than one (1) acre may require that detention be provided.

7.4.1 Comparison Points

Comparison points are locations where existing conditions and post development conditions stormwater flow characteristics such as peak flow, volume and hydrographs can be compared to evaluate the impact of the proposed development on stormwater runoff characteristics. Comparison points are locations:

1. Where stormwater runoff leaves the site of the proposed development(s).
2. Of the first downstream City owned stormwater management infrastructure.
3. Between the development and first downstream City owned stormwater infrastructure where existing flooding problems exist or any increase in stormwater runoff or peak flow causes increased flooding on private property.

In some cases the first downstream City owned stormwater management infrastructure is not within a reasonable distance downstream. In these situations, the "10% rule" will be used to determine the downstream point of analysis. The ten percent rule involves analyzing the runoff hydrograph at a point downstream where the development property comprises 10% of the area of the drainage basin at that point. In all cases, unless approved by the receiving property owner, outlet flow conditions shall be at or below predevelopment conditions.

7.4.2 Types of Storage Systems

Types of stormwater storage systems described in this section are detention and retention basins, underground storage facilities, and regional detention. Detention basins slow stormwater runoff rates, and allow little or no infiltration.

Storage systems are also used to address water quality requirements of the City's Phase II Stormwater Permit. Additional information for pollutant removal, water quality benefits

inspection, and operation and maintenance requirements for various stormwater controls can be found in the WRM Manual.

7.4.2.1 Detention Basins

Detention basins offer temporary storage accompanied by controlled release of the stored water. Detention basins are placed with the basin invert above the seasonal high water table and outlet near the invert of the pond so that there will be no standing water left after the design storm is routed through the structure. When designing detention basins, the following items shall be considered:

1. Release rate
2. Detention volume
3. Grading and depth requirements
4. Outlet works
5. Discharge water quality

7.4.2.2 Retention Basin

Retention basins are constructed basins that have a permanent pool of water throughout the year or wet season and generally are found in locations where groundwater is high and/or percolation is poor. Additional storage is provided above the permanent pool for peak discharge attenuation and water quality treatment volume.

All retention and detention basins must meet the applicable dam design guidelines discussed in Section 6.0 "Geotechnical" of this Manual.

7.4.2.3 Underground Detention Systems

Underground stormwater detention systems capture and store stormwater runoff in large pipes or other subsurface structures like concrete vaults. Stormwater runoff typically enters the system through a riser pipe connected to a catch basin or curb inlet and flows into a series of pipes, chambers, or compartments for storage. Captured stormwater runoff is retained throughout the storm event and released directly into the stormwater management system through an outlet pipe. Underground detention systems can be constructed from concrete, steel, or plastic materials. Each material has advantages, disadvantages, and specific applications. Underground detention vaults are box-shaped stormwater storage facilities typically constructed with reinforced concrete. Underground detention tanks are underground storage facilities typically constructed with large diameter metal or plastic pipe. All underground detention systems serve as an alternate to surface dry detention or retention storage, particularly for space-limited areas where there is not adequate land or land cost is a major consideration.

Basic storage design and routing methods are the same as for detention basins except that the bypass for high flows is typically included. Underground detention systems are not intended for water quality treatment.

Location

- Underground detention systems are to be located downstream of other structural stormwater controls if used to provide water quality treatment.

- Because of the cost of installing underground detention systems, typically the maximum contributing drainage area to be served by a single underground detention system is approximately twenty-five (25) acres.

General Design

- Underground detention systems are sized to control the stormwater runoff volume for the 2-year through 100-year recurrence intervals such that post- development flows are equal to or less than pre-development flows. Routing calculations, located in Section 7.2.7 "Stormwater Runoff Hydrographs" must be used to demonstrate that the storage volume is adequate.

- Slopes of underground pipes, chambers, and vaults of underground detention systems shall be designed with a maximum slope of two (2%) percent to allow drainage of the system if infiltration is not utilized. If infiltration is utilized, the pipes, chambers, and vaults shall be constructed on a flat slope.

- Minimum pipe diameter for underground detention systems shall be thirty- six (36) inches to facilitate maintenance.

- Underground detention systems shall be watertight. Certain underground detention facilities may be required to be designed by a structural engineer.

- Adequate maintenance and inspection access must be provided for all underground detention systems. Access must be provided over the inlet pipe and outflow structure. Access openings can consist of a standard frame, grate and solid cover, or a removable panel. Vaults with widths of ten (10) feet or less shall have removable lids. Access ports shall be provided for pole camera and cleaning equipment. Additional access points may be required to facilitate inspection and maintenance. The minimum number of access points shall be one (1) per chamber or as determined during review of the proposed underground detention system.

- High flow bypass shall be included in the underground detention system design to safely pass flows that exceed the design flow.

Maintenance

- Trash, debris, and sediment in the underground vaults or tanks shall be removed annually. Repairs to the inlet and outlet shall be made as needed after each inspection.

7.4.2.4 Regional Detention

Regional Detention refers to a stormwater facility that will provide detention for two (2) or more commercial or residential development sites. Multiple development sites may exist on

a single lot of record. In these cases, the detention facility serving those development sites would be considered *Regional Detention* and shall be designed and constructed in accordance with this section of the Manual.

For developments proposing to utilize Regional Detention, the facility must be designed to accommodate full build-out of all proposed lots draining to it. Likewise, the public stormwater conveyance infrastructure must be designed to accommodate full build-out of all lots draining to the Regional Detention facility. The proposed detention facility, as designed for full build-out, shall be installed with the initial improvements. No construction phasing of the regional facility is permitted.

The drainage report that contains design information for Regional Detention facilities shall clearly indicate the assumed CN values, or runoff coefficients, used in the design. A composite value shall be provided for each proposed lot in the subdivision. These composite CN values, or runoff coefficients, shall be clearly indicated on the post-development drainage basin map(s).

The Regional Detention facility shall be certified in accordance with Section 7.4.4 "Stormwater Storage Facility Certification" of this Manual. Certification of the regional facility is required, as designed for full build-out, prior to the first certificate of occupancy of the overall development.

If the Regional Detention facility was used for sediment control during infrastructure construction, the filter structure and excess sediment must be removed from the facility prior to certification.

Individual lots draining to the facility shall be designed to control sediment within the boundaries of each lot. Runoff from individual lots shall be directed to the installed stormwater conveyance infrastructure designed to accommodate that lot. No increase in peak runoff flow rate will be permitted onto adjacent lots, as a result of a lot built-out, unless the runoff is directed into the original conveyance system designed to handle that runoff.

7.4.3 Storage Design

This subsection provides guidelines related to the design of stormwater storage systems. These storage systems shall be designed by a licensed professional engineer in the State of Alabama who is qualified by reason of education and experience in the field of stormwater design. Design drawings, specifications, and design calculations shall be submitted to the City for review. The City requires a Stormwater Drainage Checklist be prepared as part of the DRT submittal package for all projects that require stormwater detention. The checklist shall be included as the first page of the drainage report. Once the stormwater storage system is constructed, this engineer must certify that the system has been constructed properly and that it will function and operate for the purpose that it was designed. NRCS methodology shall be used for all hydrologic analyses for storage facility design. The modified rational methodology shall not be used for storage design.

The City may elect not to incorporate detention if a development drains into a natural major water course and the post-development discharge does not cross another property or

portions of the developed property before it is introduced into the natural major water course. In order to illustrate that detention will not have an adverse impact on existing infrastructure the City will require analysis at critical crossings (comparison points) downstream of the development.

7.4.3.1 Length to Width Ratio

The inlet and the outlet of the basin should be located to prevent short-circuiting and to maximize flow through the basin to improve water quality benefits. If the pond is performing as a sediment basin, the ratio between the length and width (L/W) will be 2:1 or larger. If this ratio cannot be attained because of topographic constraints, then additional provisions, such as a temporary baffle wall, shall be incorporated into the basin to create a L/W of 2:1.

7.4.3.2 Release Rate

Release rates for managing stormwater peak discharge by detention will be based on the following conditions:

1. Post-development peak discharge is less than or equal to pre-development peak discharges for the 2-, 5-, 10-, and 25-year, 24-hour design storm events.

2. Limit release rate based on the discharge capacity (level of service of stormwater management system from the development to the first City- maintained stormwater infrastructure) downstream from the project as discussed in Section 7.4.1 "Comparison Points".

7.4.3.3 Detention Volume

Detention volume shall be adequate to provide attenuation of the post-development peak discharge rates to the allowable release rate set according to provisions in Section 7.4.3.2 "Release Rate". Hydraulic features of the outlet control structure shall be designed such that all stormwater runoff volume will be released within seventy-two (72) hours.

Routing calculations shall be consistent with the procedures outlined in Section 7.4.3.8 "Routing Techniques". If sediment accumulation occurs during construction resulting in a loss of detention volume in the basin, design dimensions must be restored before submitting the as-built certification.

7.4.3.4 Depth

A minimum freeboard of one-half (0.5) feet shall be provided above the peak 100-year design flood elevation.

7.4.3.5 Outlet Works

The principal spillway shall convey the 25-year discharge rate for total watershed development without allowing flow to enter the emergency outlet. The emergency outlet shall be sized to safely pass the 100-year design storm. A smooth and stable transition to the first City-maintained stormwater management facility or other comparison point as discussed in Section 7.4.1 "Comparison Points" shall be provided.

7.4.3.6 Sediment Storage

Sediment storage shall be provided in basins to contain three thousand six hundred (3,600) cubic feet per contributing drainage acre per the City standard for erosion control.

This volume may be maintained in the permanent facility. Additional guidance and a sediment basin design data sheet can be found in the WRM Manual. It is recommended that a sediment sump (forebay or trap) be installed at the inlet of the pond structure to allow for sediment accumulation and clean out. Additional information on sediment storage can be found in the WRM Manual. This sediment storage shall not be included in the storage volume required to meet stormwater peak flow and volume requirements.

7.4.3.7 Outlet Protection

Refer to Section 7.3.8.5 "Culverts – Outlet Protection" for outlet protection requirements and guidance.

7.4.3.8 Routing Techniques

The primary function of a stormwater storage facility is to reduce the peak flow of a hydrograph to a desired value. A reservoir routing procedure is used to determine the peak flow reduction by a stormwater storage facility.

The engineer of record shall use a standard computer software program to estimate the performance of the detention basin. These programs must base the routing on a storage continuity approach, such as the level-pool routing method. Documentation in the drainage report shall include input variables and peak flow rates and stages for each design storm. The configuration of the outlet structure shall be clearly described. Furthermore, stage (or elevation) versus storage and discharge table(s) shall be provided. Additional design criteria discussed in this section, but not necessarily contained in the routing procedures, shall be addressed in the application as supporting information and/or contained within the design documents. Example 4.1 "Sizing of the Basin for Stormwater Attenuation" in the SWMM is an example of sizing a storage facility using computer software.

The Storage Indication Method is recommended for performing manual reservoir routing calculations for final design of detention facilities. Methodologies, procedures, and an example for manual routing are found in Section 4.4.1 "Storage Routing – Manual Routing Calculations" of the SWMM.

7.4.3.9 Stage-Storage and Stage-Discharge

Stage-storage and stage-discharge relationships must be determined for storage facility analyses. Documentation included in the drainage report shall include assumptions, calculations and summary of stage-storage and stage-discharge relationships used for all the hydrologic analyses.

If the invert of the outlet structure is above the pond invert, the storage shall be based on the outlet invert since any storage below the outlet invert is "dead" storage. Figure 4-5 "Example Stage-Storage Curve" in the SWMM shows an example of a stage-storage curve.

A stage-discharge curve defines the relationship between depth of water and the discharge or outflow from a storage facility. A typical storage facility has two outlets or spillways: a principal outlet and a secondary (or emergency) outlet. The principal outlet shall be designed with a capacity sufficient to convey the design flows without allowing

flow to enter the emergency spillway. A pipe culvert, weir, or other appropriate outlet can be used for the principal spillway or outlet. Figure 4-6 "Example Stage-Discharge Curve" in the SWMM shows an example of a stage-discharge curve.

The emergency spillway is sized to provide a bypass during a flood that exceeds the design capacity of the principal outlet. This spillway shall be designed taking into account the potential threat to downstream areas if the storage facility were to fail.

7.4.3.10 Storage Basin Safety

Access management may be required to prevent entry to facilities that present a hazard to children and, to a lesser extent, all persons. Fences and warning signs may be required for storage facilities where the following conditions exist:

1. Rapid changes in stage.
2. Water depths either exceed two and one-half (2.5) feet for more than twenty-four (24) hours or are permanently wet and have side slopes steeper than four (4) horizontal to one (1) vertical (4H:1V).

Consideration of access for maintenance and emergency response must be addressed for storage basins where fences are required. Basin side slopes shall be 4H:1V or flatter from two and one-half (2.5) feet below normal water level to the toe of slope.

Storage basins shall be designed with the following additional safety factors taken into consideration when feasible:

1. Outlets shall be placed away from areas of heavy public use.
2. Integrate outlet culvert into an outlet structure that has smaller openings and/or utilize a sloping trash/safety rack at the entrance (bars on face of trash rack shall be spaced to provide four (4) to five (5) inch clear openings between bars).
3. Grates shall be provided for all control structure openings greater than one (1) foot.
4. Grade overall site with safety in mind (i.e., mild side slopes leading to and within the storage facility).
5. Separate inflow and outlet pipes by long distances and ensure inflow and outflow pipes are not directly across from each other.
6. Eliminate shallow, shallow-stagnant water in bottom of "dry" basins that can be conducive to mosquito breeding (determine maximum groundwater elevations prior to design).

7.4.4 Stormwater Storage Facility Certification

The City will require that storage facilities constructed for proposed developments complete the Stormwater Storage Facility Final Certification Form which can be found in Appendix S, prior to issuance of a Certificate of Occupancy for site plan developments.

The City will require that storage facilities for subdivision developments complete the City

Storage Facility Final Certification Form prior to final approval and acceptance of the subdivision. If deemed necessary by the engineer responsible for the design of the storage facility and the City Engineer, a letter of credit, cashier's check, or surety bond may be posted to allow for final approval and acceptance when there is cause not to complete the required work on the storage facility. The bond amount will be equal to the estimated cost of construction to meet the approved storage facility design.

The City Stormwater Storage Facility Final Certification Form shall be stamped and signed

by a licensed professional engineer in the State of Alabama that was responsible for the design of the storage facility for both site plan and subdivision developments.

It is the responsibility of the engineer of record that completed the design of the storage facility to compare the as-built conditions with those of the approved design. If the as-built conditions differ from those of the approved design, complete submissions of as-built drawings for the storage facility will be required. The as-built information shall be delivered in a format similar to the original storage facility design. The City will review the as-built drawings and may require that the approved drainage report be revised to reflect the as-built conditions. In these situations, the City will not accept a Stormwater Storage Facility Final Certification Form until the as-built and revised drainage report has been approved.

7.4.5 Operation and Maintenance

The City will require that a Stormwater Storage Facility Operations and Maintenance Agreement (O&M Agreement) be submitted for all proposed storage facilities. The O&M Agreement can be found in Appendix T. The O&M Agreement must include a description of the storage facility and its components and provide a maintenance schedule to ensure that the storage facility is operating as designed. If a storage facility is designed to provide sediment storage during construction, the O&M Agreement must also provide a maintenance schedule during construction operations. The O&M Agreement is required to be submitted prior to any certificates of occupancy being issued on sites that have newly constructed storage facilities.

The City will require that an O&M Agreement be executed by the entity responsible for the upkeep and maintenance of newly constructed storage facilities. The O&M Agreement must be recorded at the Lee County Probate Office, and a copy submitted to the City with the Storage Facility Final Certification Form. The O&M Agreement will contain the previously approved Operation and Maintenance Plan and identify the entity responsible for perpetual care, operation, maintenance, and associated liabilities of the storage facility along with a letter from the entity accepting the responsibilities as outlined in the O&M Agreement.

In addition to the owner performed inspections identified in the O&M Agreement, the City conducts annual inspections of all storage facilities within the City. The City will provide a copy of the inspection report to the entity responsible for the maintenance. This maintenance and/or remedial work identified during the City's inspection may be in addition to the required maintenance identified in the O&M Agreement. The owner of the pond shall submit evidence that the required maintenance and/or remedial repairs identified

during the City inspections have been completed. Failure to follow the O&M Agreement and/or complete the necessary repairs identified during the City inspection will result in enforcement actions.

7.5 FEMA REQUIREMENTS

This section is intended to provide guidance for proposed development within the 100-year floodplain. Persons using this Manual whose proposed development is located within the 100-year floodplain must meet all requirements in the City Code and National Flood Insurance Program (NFIP) regulations.

Established under the National Flood Insurance Act of 1968 and broadened with the passage of the Flood Disaster Act of 1973, the NFIP provides federally supported flood insurance to community residents that voluntarily adopt and enforce regulations to reduce future flood damage. As part of the program, the federal government defines minimum standards for floodplain development that the local communities must adopt to be eligible for program benefits. Development of property located within the regulatory floodplain must comply with all applicable City ordinances, regulations, and guidelines.

The determination of all floodplain boundaries shall be based on the maximum recorded or projected flood elevation applicable. The areas constituting a riverine floodplain shall be determined by reference to the following sources in the order indicated below. If the first source is not available, one or both of the others shall be used:

1. Flood Insurance Rate Maps (FIRM) prepared by the Federal Emergency Management Agency;

2. Floodplain Information Maps and Profiles, prepared by the U.S. Department of Agriculture, Natural Resources Conservation Service;

3. Hydrologic Investigations Atlas, prepared by the U.S. Department of the Interior, Geologic Survey – these studies cover the entire area of Auburn and show the flood of record, rather than a projected 100-year flood, for each area subject to flooding.

On-site topographic surveys shall be performed to locate the precise floodplain line on a parcel. The survey shall use the flood profile contained in the sources listed above or, if no such profile exists, by performing standard runoff calculations.

7.5.1 Floodplain Protection Ordinance

All provisions of the latest version of the Flood Damage Prevention Ordinance contained in the City Code shall be applicable to development in the floodplain.

7.5.2 Permanent Open Space

The City strongly encourages that all floodplain areas be designated as permanent open space. However, should a development propose an encroachment into the 100-year floodplain the regulations set forth in the Zoning Ordinance, Subdivision Regulations, and WRM Manual shall also apply in addition to the requirements set forth in this section.

7.5.3 Building Elevation

All buildings or any residential, institutional, office, commercial and entertainment, commercial recreation, recreational rental dwelling, or nursery uses (other than those specifically named in this section) may be permitted, provided that all floor areas shall be raised so that no floor, or its structural supports, or any utility line has less than one (1) foot of clearance between its lowest point and the 100-year flood elevation. Any reduction of cross-sectional area due to vertical supporting members shall be offset by compensatory storage.

7.5.4 Installation of Fill Materials

Fill may be placed within the floodplain only when allowed by the City Engineer and pursuant to applicable City Ordinances and code requirements and in accordance with the following provisions:

1. Compensatory storage shall be provided to offset the storage lost through the filling.

2. All changes in velocity, depth of flood elevation, or storage shall be limited to the property owners who have been granted flood or flow easements, provided that in no event shall an increase in flood elevation be permitted if it would affect any existing building or bring any building to within one (1) foot of the flood elevation.

3. In no instance shall the depth of fill in a riverine floodplain exceed five (5) feet, nor shall any fill be placed within twenty-five (25) feet of the stream channel or in a location which might be endangered by or accelerate a meander. In an inland depressional floodplain the depth of fill measured from the natural grade to the new surface shall not exceed five (5) feet.

4. Fill shall consist of soil or rock materials only; sanitary landfills shall not be permitted in the floodplain. Further, all fill areas shall be stabilized with material that will ensure and protect against erosion hazards, undercutting, and undermining.

7.5.5 Filling in Floodplain

The filling of areas within the 100-year floodplain shall be approved only where plans and specifications have been submitted that meet all requirements of this section, other applicable City requirements, other applicable State and Federal requirement, and where the following conditions exist which necessitate filling within the floodplain:

1. The property would otherwise be able to accommodate at least one (1) residential dwelling with a lot meeting requirements of the Zoning Ordinance but cannot, because of the floodplain, accommodate even one (1) single-family unit; or,

2. That the location and/or configuration of the buildable land are such that the intensity of the permitted land-use cannot be realized without filling in the

floodplain. In no event shall the filling of the floodplain be permitted to increase the allowable buildable area.

As stated in Section 7.5.5 "Filling in the Floodplain", compensatory storage shall be provided to offset floodplain storage lost as a result of placing fill within the 100-year floodplain. For every cubic yard of material placed in the floodplain a cubic yard of compensating cut must be provided within the 100-year floodplain.

7.5.6 Conditional Letter of Map Revision

A Conditional Letter of Map Revision (CLOMR) is a process where the Federal Emergency Management Agency (FEMA) will provide review and comments on a proposed project that would, upon completion, affect the hydrologic or hydraulic characteristics of a flooding source and result in a change to the existing regulatory floodway, effective Base Flood Elevation (100-year flood elevation) or the Special Flood Hazard Area (100-year floodplain). The CLOMR issued by FEMA does not officially revise an effective National Flood Insurance Program map but it indicates whether the project, if constructed as proposed, would be recognized by FEMA.

The City Engineer will require a CLOMR for a proposed project if the proposed project:

1. Results in a change to the floodplain boundary; or
2. Results in an increase of one-tenth (0.10) of a foot increase in the 100-year flood.
3. Results in an encroachment into the floodway with an increase in the 100-year flood elevation greater than zero (0.00) feet.

If a CLOMR is required, the CLOMR must be obtained prior to work occurring in the affected area. The CLOMR must be submitted using the appropriate FEMA form and in accordance with FEMA requirements.

7.5.7 Letter of Map Revision

A Letter of Map Revision (LOMR) is an administrative procedure that FEMA uses to officially revise the effective published Flood Insurance Rate Map. If a CLOMR has been obtained for a proposed project, a LOMR must be obtained after the project has been completed prior to the City issuing a Certificate of Occupancy.

7.5.8 Floodway

As stated in the City Code, encroachments into the floodway are prohibited. Development may be permitted, however, provided it is demonstrated that all requirements of the Code of Federal Regulations (CFR) for the NFIP are met.

The City may approve an encroachment into the floodway provided a No Rise Certification is provided. The No Rise Certification must be submitted by a licensed professional engineer in the State of Alabama.

7.6 DRAINAGEWAYS

Regrading, stripping of vegetation, or filling is permitted in these areas, provided that the resultant new drainageway has less velocity than existed previously or reduces streambank erosion through the provision of erosion control measures approved by the City Engineer.

APPENDIX R. Storm Sewer Details and Standard Drawings

This page intentionally left blank.

CAST IRON RING AND COVER DETAIL

APPROVED FOR NON TRAFFIC

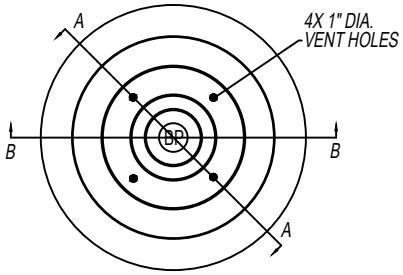

COVER FACE

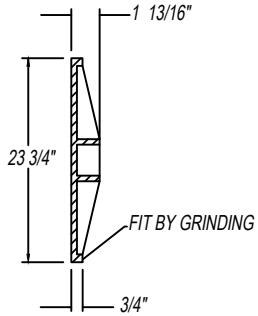

SECTION A - A

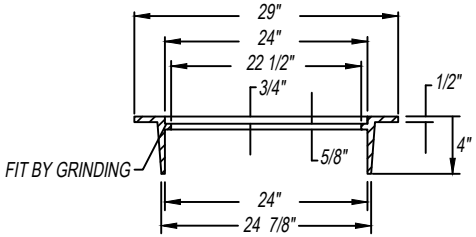

SECTION B - B

APPROVED FOR TRAFFIC

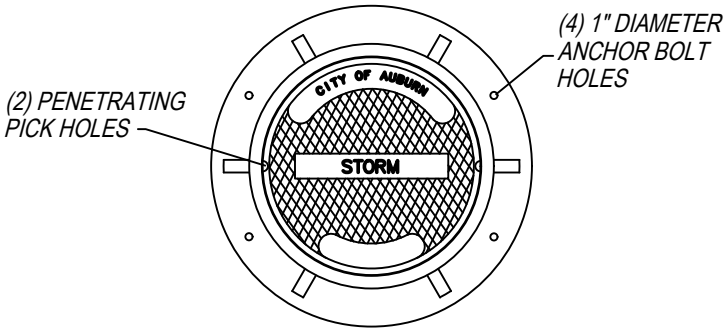

COVER FACE

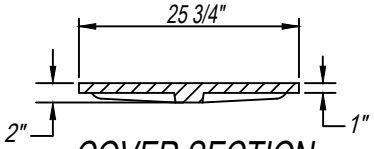

COVER SECTION

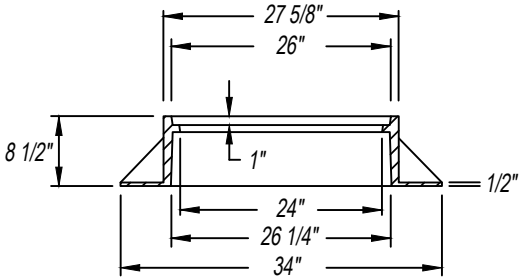

FRAME SECTION

STANDARD DETAILS: STORM	7.00
City of Auburn	
DEPARTMENT: ENGINEERING	REVISIONS:
SCALE: N.T.S.	
DRAWN BY: GINA McCRICKARD	
CITY ENGINEER: Alison Frazier	
APPVD. BY: Alison Frazier	
IMPLEMENTED: 01-01-2022	

DEPRESSED GUTTER DETAIL

DEPRESSED GUTTER DETAIL #1

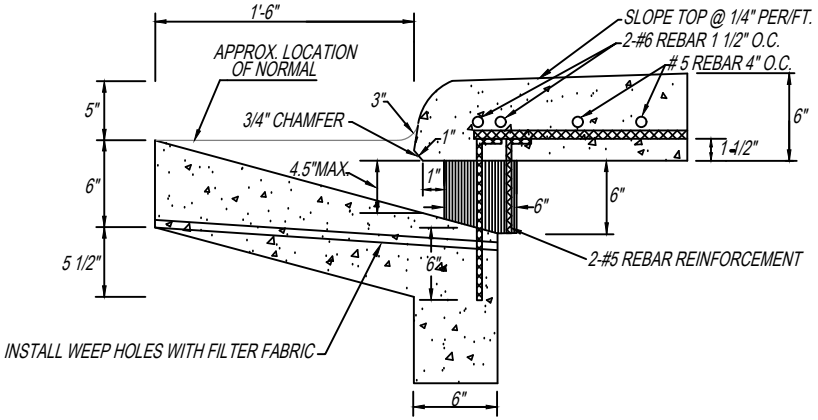

DEPRESSED GUTTER DETAIL #2

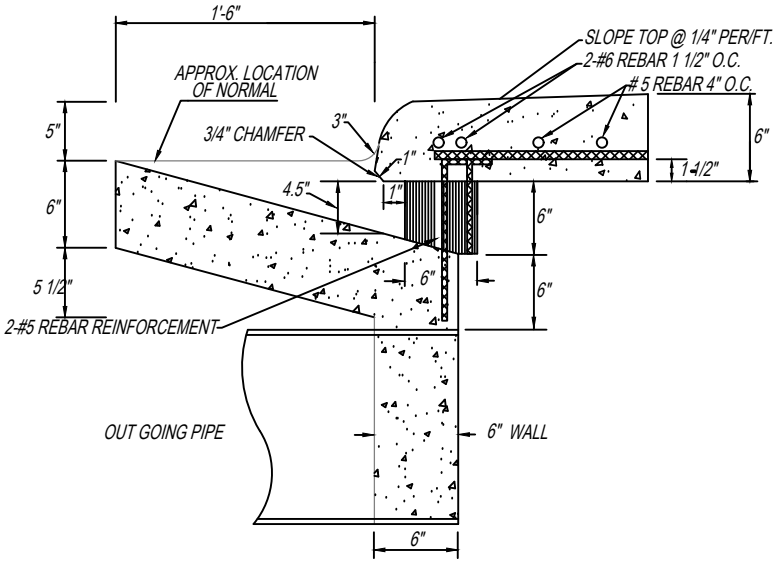

STANDARD DETAILS: STORM	7.01
City of Auburn	
DEPARTMENT: ENGINEERING	REVISIONS:
SCALE: N.T.S.	
DRAWN BY: GINA McCRICKARD	
CITY ENGINEER: Alison Frazier	
APPVD. BY: Alison Frazier	
IMPLEMENTED: 01-01-2022	

DOUBLE WING INLET

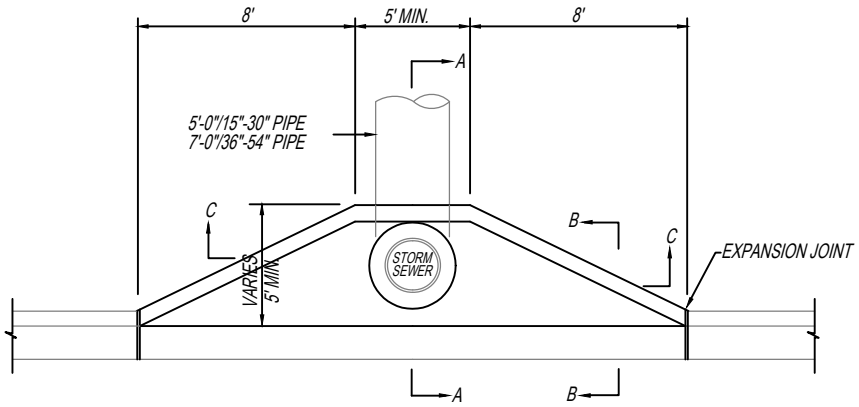

DOUBLE WING INLET PLAN

SINGLE WING INLET

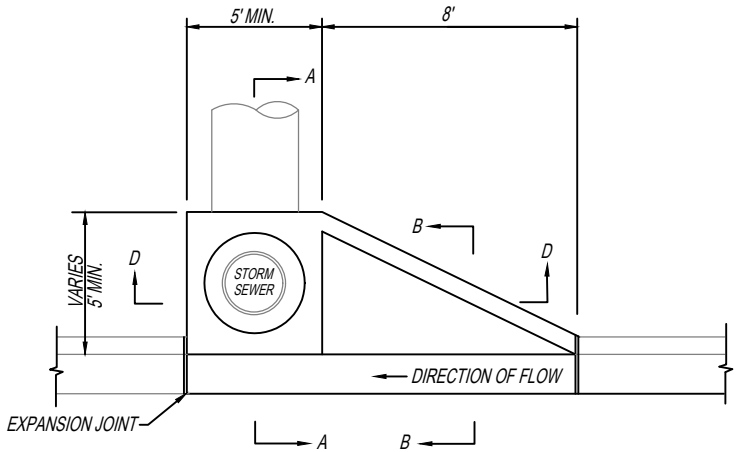

SINGLE WING INLET PLAN

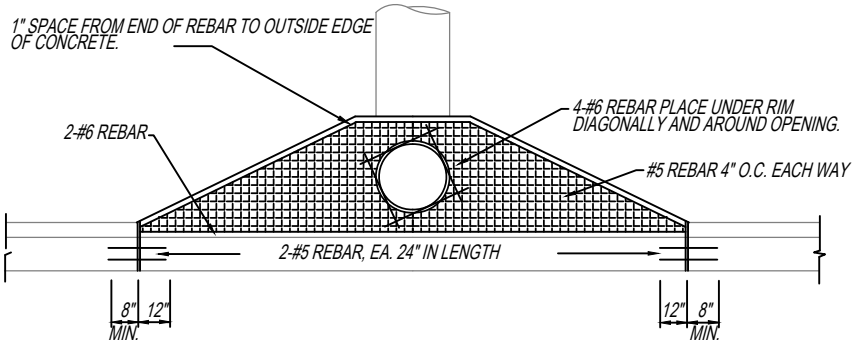

DOUBLE WING INLET TOP SECTION

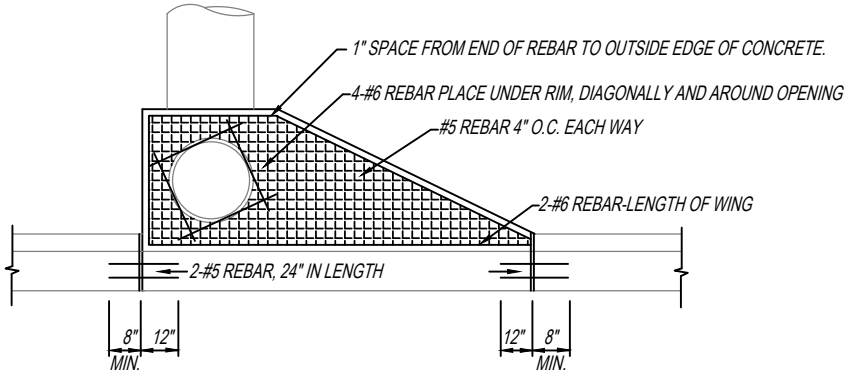

SINGLE WING TOP SECTION

STANDARD DETAILS: STORM	7.02
City of Auburn	
DEPARTMENT: ENGINEERING	REVISIONS:
SCALE: N.T.S.	
DRAWN BY: GINA McCRICKARD	
CITY ENGINEER: Alison Frazier	
APPVD. BY: Alison Frazier	
IMPLEMENTED: 01-01-2022	

INLET BOX DETAIL

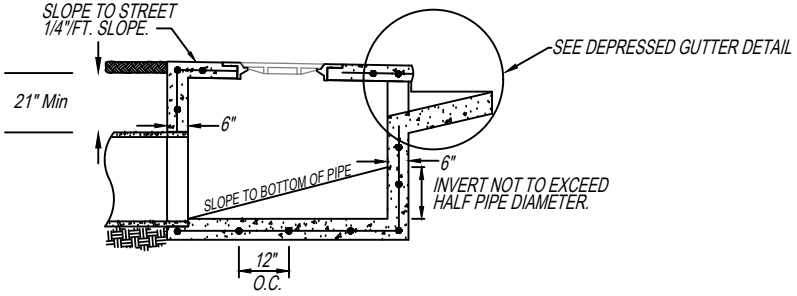

INLET BOX DETAIL AA (#1)

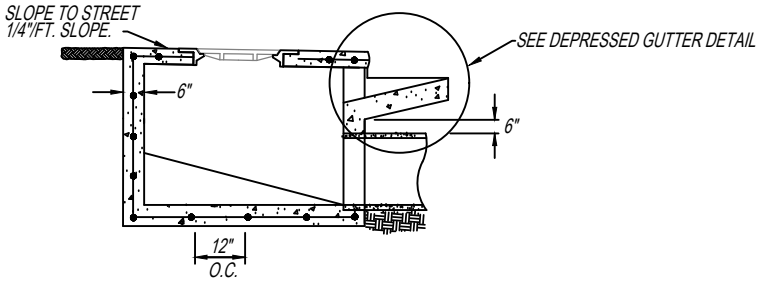

INLET BOX DETAIL AA (#2)

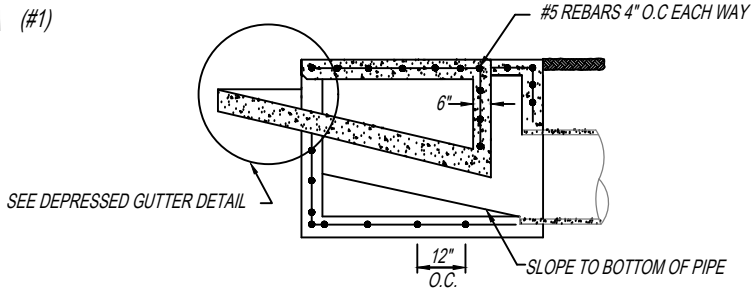

INLET BOX DETAIL BB

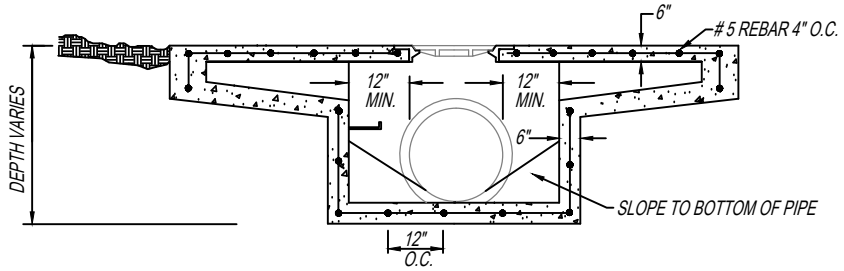

DOUBLE WING INLET DETAIL CC

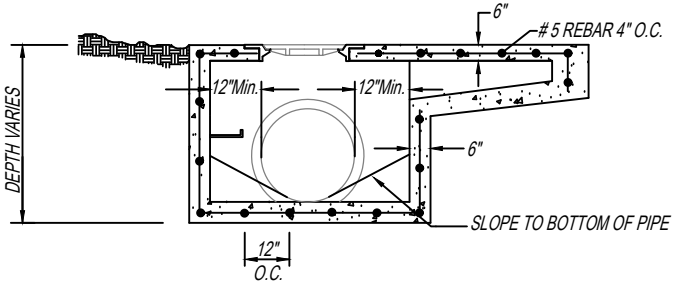

SINGLE WING INLET DETAIL DD

STANDARD DETAILS: STORM	7.03
DEPARTMENT: ENGINEERING	REVISIONS:
SCALE: N.T.S.	
DRAWN BY: GINA McCRICKARD	
CITY ENGINEER: Alison Frazier	
APPVD. BY: Alison Frazier	
IMPLEMENTED: 01-01-2022	

City of Auburn

DOUBLE WING INLET DETAIL

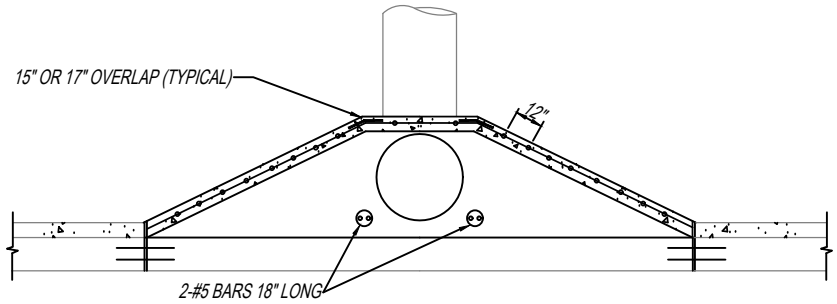

DOUBLE WING INLET SLAB SECTION

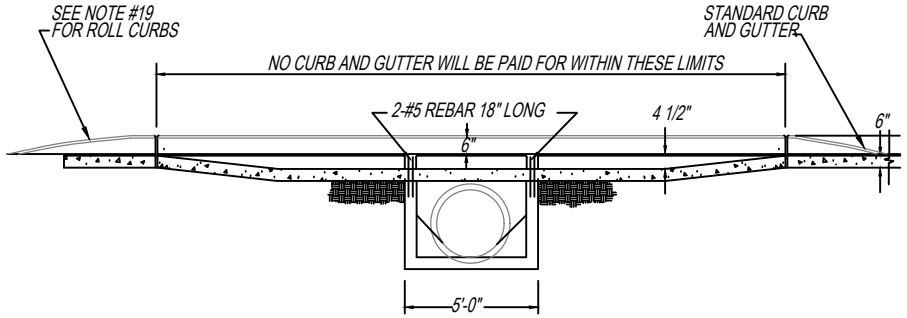

DOUBLE WING INLET ELEVATION

STANDARD DETAILS: STORM	7.04
City of Auburn	
DEPARTMENT: ENGINEERING	REVISIONS:
SCALE: N.T.S.	
DRAWN BY: GINA McCRICKARD	
CITY ENGINEER: Alison Frazier	
APPVD. BY: Alison Frazier	
IMPLEMENTED: 01-01-2022	

SINGLE WING INLET DETAIL

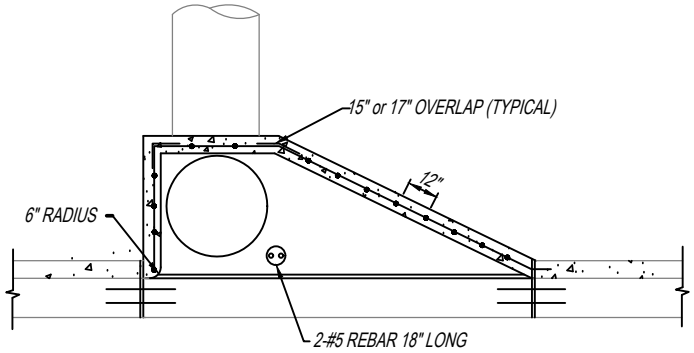

SINGLE WING INLET SLAB SECTION

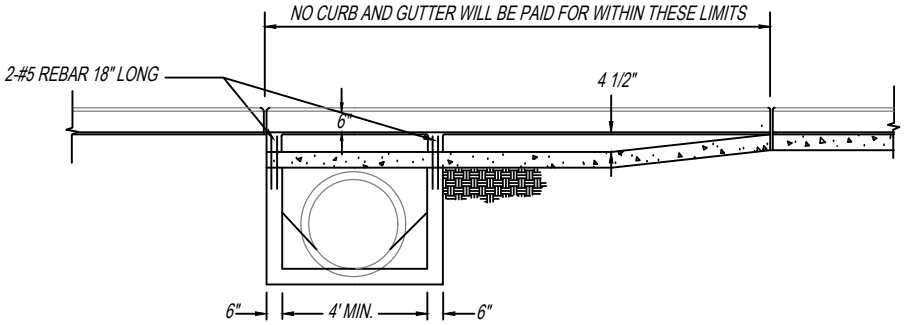

SINGLE WING INLET ELEVATION

STANDARD DETAILS: STORM	7.05
DEPARTMENT: ENGINEERING	REVISIONS:
SCALE: N.T.S.	
DRAWN BY: GINA McCRICKARD	
CITY ENGINEER: Alison Frazier	
APPVD. BY: Alison Frazier	
IMPLEMENTED: 01-01-2022	

City of Auburn

INLET BOX DETAIL(temporary drain)

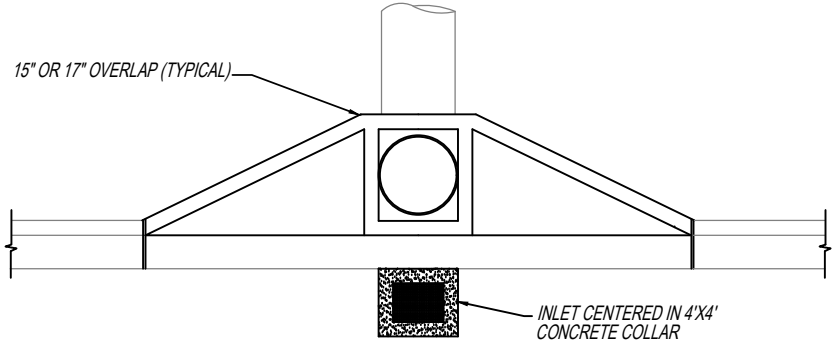

PLAN VIEW

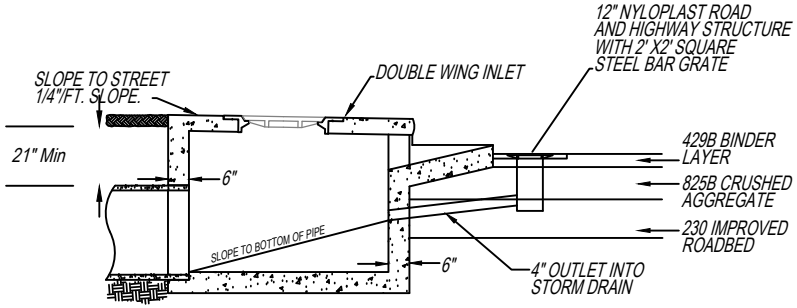

PROFILE VIEW

NOTE:
THIS DETAIL SHALL BE USED AT THE SAG INLETS WHERE WEARING SURFACE WILL NOT BE PLACED AT THIS TIME.

INLET SHALL BE PLACED AT LOWEST POINT IN THE ROADWAY.

UTILITY CONFLICT JUNCTION BOX

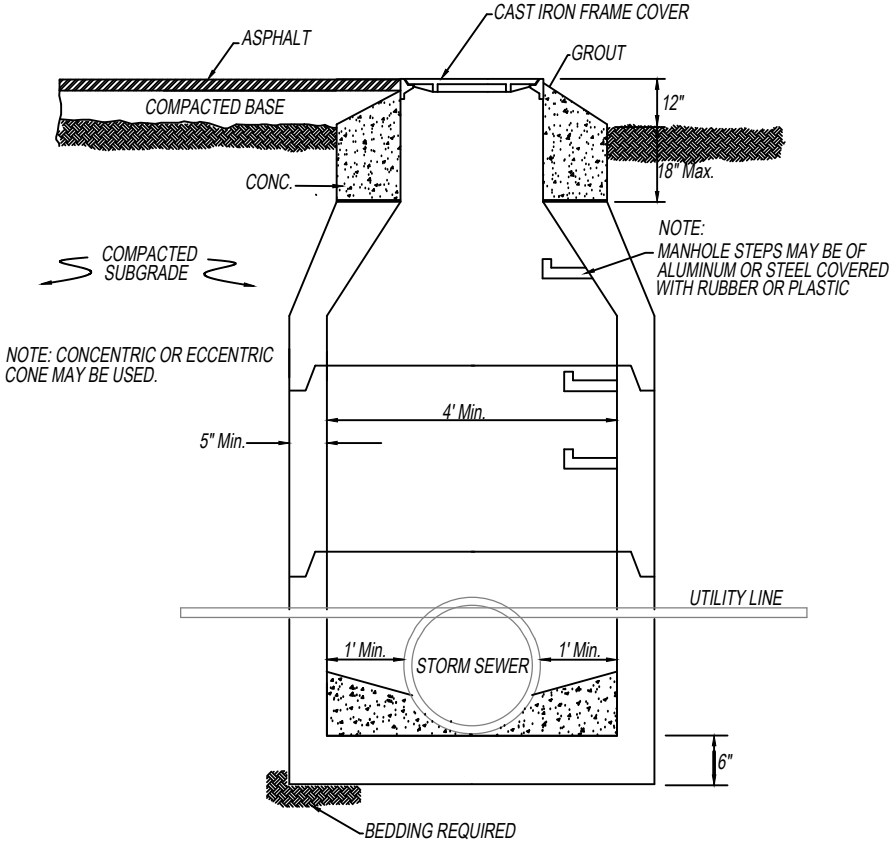

SECTIONAL ELEVATION

NOTES:
1. INSTALL JUNCTION BOX WHEN THERE IS A CONFLICT BETWEEN STORM SEWER AND OTHER UTILITY LINES.
2. IF THE CONFLICTING UTILITY LINE IS A SANITARY SEWER LINE, REPLACE THE V.C. OR PVC. PIPE WITH DUCTILE IRON PIPE.
3. IF POSSIBLE INSTALL THE CONFLICTING UTILITY IN THE UPPER 1/3 OF THE STORM SEWER.

STANDARD DETAILS: STORM	7.06
City of Auburn	
DEPARTMENT: ENGINEERING	REVISIONS:
SCALE: N.T.S.	
DRAWN BY: GINA McCRICKARD	
CITY ENGINEER: Alison Frazier	
APPVD. BY: Alison Frazier	
IMPLEMENTED: 01-01-2022	

PIPE BEVELL

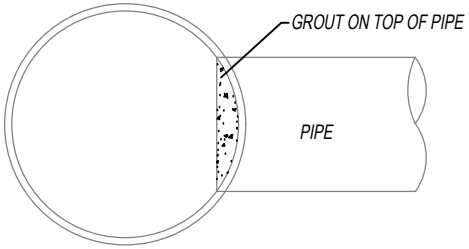

NOTE:
PIPE MUST BE FLUSH ON SIDES OF BOX.

PLAN VIEW

PIPE ENTRANCE IN BOX

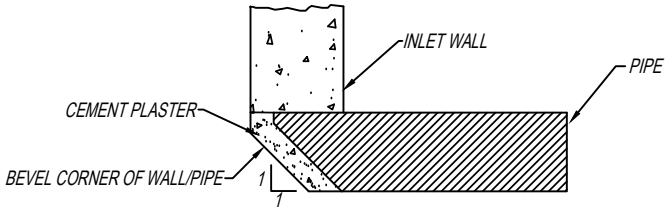

BEVELLED RING

(POURED IN PLACE APPLICATION)

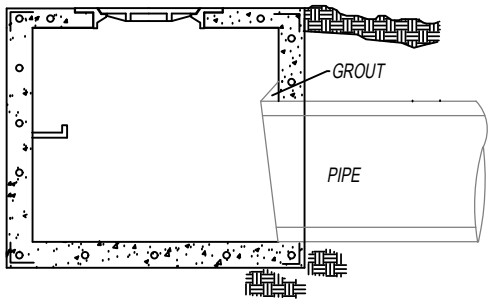

ELEVATION

STANDARD DETAILS: STORM	7.07
City of Auburn	
DEPARTMENT: ENGINEERING	REVISIONS:
SCALE: N.T.S.	
DRAWN BY: GINA McCRICKARD	
CITY ENGINEER: Alison Frazier	
APPVD. BY: Alison Frazier	
IMPLEMENTED: 01-01-2022	

NOTES

1. HEADWALL AND WINGWALLS SHALL HAVE A RUBBED SMOOTH FINISH. PIPE SHALL BE CUT FLUSH WITH THE INSIDE FACE OF THE HEADWALL.
2. JUNCTION BOX INVERTS SHALL BE SMOOTH AND APPROXIMATE THE CROSS SECTION OF THE PIPE USED. AT LEAST 0.25' OF FALL IS REQUIRED ACROSS ALL JUNCTION BOXES AND/OR INLETS. THE FLOOR SHALL BE SLOPED TO DRAIN ALL WATER TO THE INVERT. ALL PIPE SHALL BE CUT FLUSH WITH THE FACE OF THE JUNCTION BOX AND INLET JUNCTION BOX.
3. CAST IRON FRAME AND COVER SHALL WEIGH 375 POUNDS IN TRAFFIC AND 325 POUNDS OFF TRAFFIC.
4. ALL PIPES SHALL BE LAID WITH ENDS ABBUTTING AND TRUE TO LINE AND GRADE. PIPE SHALL BE FITTED AND MATCHED TO FORM A LINE WITH A SMOOTH, UNIFORM INVERT. GROUT SHALL THEN BE APPLIED SMOOTHLY TO THE OUTSIDE TOP TWO THIRDS AND THE INSIDE BOTTOM ONE HALF TO WATER PROOF ALL PIPE.
5. PRECAST MANHOLES MAY BE USED FOR PIPE UP TO 36". LARGER SIZES MUST BE APPROVED PRIOR TO USE.
6. FOR PIPE SIZES LARGER THAN 42", HEADWALLS SHALL BE AS SPECIFED BY THE CITY ENGINEER.
7. INLETS SHALL NOT BE PLACED IN A RADIUS OF INTERSECTING STREETS OR DRIVES.
8. PRECAST ITEMS MUST BE APPROVED PRIOR TO USE.
9. CHAMFER STRIPS ARE REQUIRED ON ALL HEADWALL EDGES.
10. RIPRAP IS REQUIRED AT ALL PIPE OUTLETS WITH GEOFABRIC. THE SIZE OF THE PAD SHALL BE AS DESIGNED BY THE ENGINEER BUT SHALL BE CONSTRUCTED PER THE DETAIL.
11. DISTANCE FROM RADIUS POINT TO EXISTING EXPANSION OR CONSTRUCTION JOINT SHALL BE AT LEAST 3.0': IF LESS THAN 3.0', CURB AND GUTTER SHALL BE REPLACED TO EXISTING JOINT.
12. MINIMUM INSIDE DIMENSION OF JUNCTION BOXES AND INLETS SHALL BE 4 FEET.
13. TOP OF INLET SHALL BE THE SAME ELEVATION AS ADJOINING CURB AND GUTTER.
14. 2" MINIMUM WEEP HOLES SHALL BE CONSTRUCTED IN INLETS TO FACILITATE SUBGRADE DRAINAGE.
15. IF INLETS ALSO SERVES AS A JUNCTION BOX, CONTOUR BOTTOM AS PER JUNCTION BOX REQUIREMENTS.
16. MORTAR: A CONCRETE MIX EQUIVALENT TO AT LEAST A 3000 PSI STABILITY.
17. NUMBER 5 REBAR SHALL BE INSTALLED INTO ALL CURB AND GUTTER COLD JOINT TIE INS, AT ALL INLETS & JUNCTION BOXES, OR TO BE DETERMINED BY THE PROJECT ENGINEER/ PROJECT INSPECTOR.
18. INSTALL STEPS IN JUNCTION BOXES OR INLET EVERY 16" ON CENTER ACCESSIBLE TO MANHOLE COVER. AT LEAST ONE STEP IS REQUIRED PER BOX, MINIMUM.
19. FOUR FOOT (4') MINIMUM TRANSITIONS FROM ROLL CURB TO STANDARD CURB AND GUTTER TO ALLOW STANDARD INLET TO BE CONSTRUCTION.
20. INVERTS SHALL BE POURED CONCRETE. NO BRICK OR ROCKS SHALL BE USED AS FILLER MATERIAL.
21. #5 BARS REQUIRED IN GUTTER.
22. INVERTS SHALL NOT EXCEED HALF THE DIAMETER OF THE PIPE. NO FLAT AREAS ARE PERMITTED.
23. INLET TOPS SHALL BE SLOPED AT 1/4"/ft TOWARD THE STREET (SEE DETAIL).
24. CONCRETE USED FOR STORM STRUCTURES MUST HAVE A MINIMUM COMPRESSIVE STRENGTH OF 3000 psi.
25. MODIFIED INLETS MUST HAVE SAME CARRYING CAPACITY AS STANDARD INLETS. DIMENSIONS/DETAILS MUST BE APPROVED BY CITY OF AUBURN ENGINEER PRIOR TO INSTALLATION.
26. HDPE CAN BE USED IN AREAS WHERE IT WILL BE OUTSIDE OF THE ROADWAY PAVEMENT UPON CITY ENGINEER APPROVAL.
27. AN EXPANSION JOINT MUST BE PROVIDED AT THE INLET / CURB FACE.
28. MECHANICAL TAMPING IS REQUIRED AROUND AND BEHIND INLETS.

STANDARD DETAILS: STORM	7.08
City of Auburn	
DEPARTMENT: ENGINEERING	REVISIONS:
SCALE: N.T.S.	03-01-2024
DRAWN BY: GINA McCRICKARD	
CITY ENGINEER: Alison Frazier	
APPVD. BY: Alison Frazier	
IMPLEMENTED: 01-01-2022	

JUNCTION BOX DETAIL

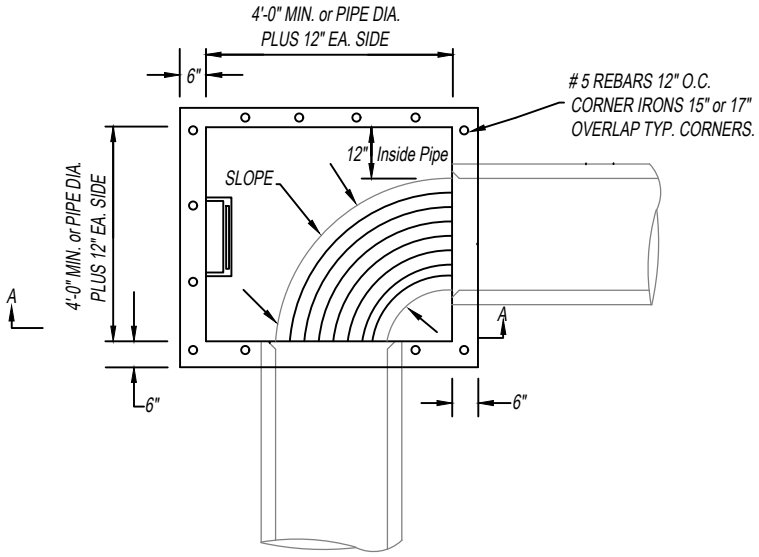

SECTIONAL PLAN

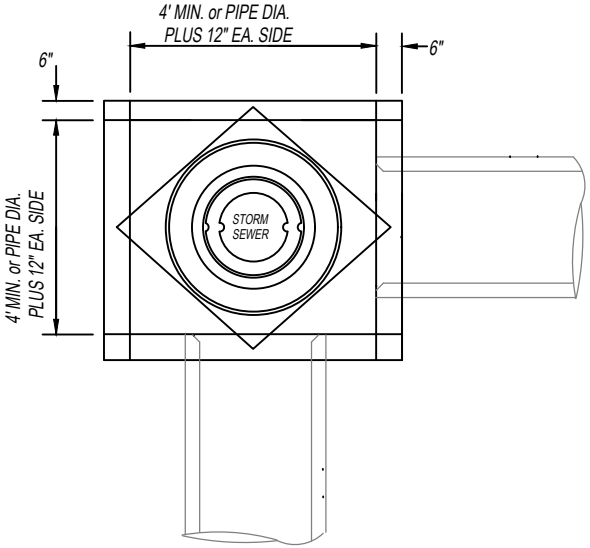

PLAN

STANDARD DETAILS: STORM	7.09
City of Auburn	
DEPARTMENT: ENGINEERING	REVISIONS:
SCALE: N.T.S.	
DRAWN BY: GINA McCRICKARD	
CITY ENGINEER: Alison Frazier	
APPVD. BY: Alison Frazier	
IMPLEMENTED: 01-01-2022	

AREA INLET/JUNCTION BOX ELEVATION

NOTE:
TRAFFIC RATED RING AND COVER WILL BE REQUIRED IN ALL TRAFFIC AREAS.

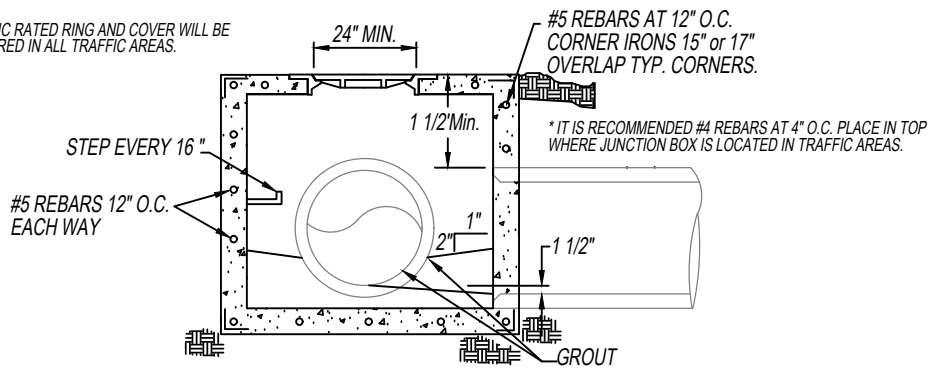

SECTIONAL ELEVATION AA

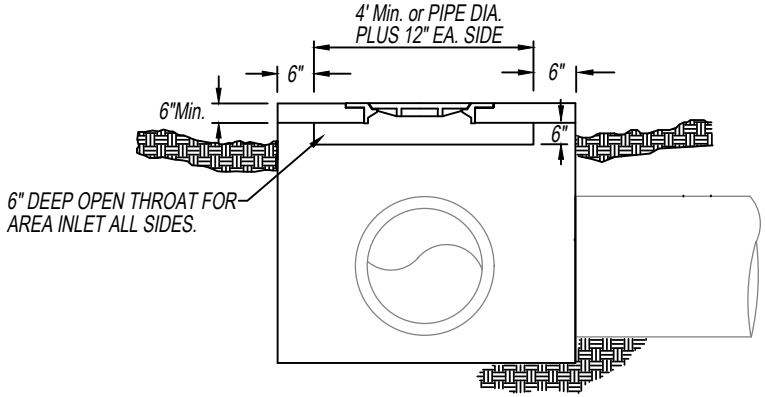

AREA INLET ELEVATION

NOTE:
NOT TO BE USED ON ALDOT RIGHT OF WAY
UNLESS APPROVED BY ALDOT IN WRITING.

STANDARD DETAILS: STORM	7.10
City of Auburn	
DEPARTMENT: ENGINEERING	REVISIONS:
SCALE: N.T.S.	
DRAWN BY: GINA McCRICKARD	
CITY ENGINEER: Alison Frazier	
APPVD. BY: Alison Frazier	
IMPLEMENTED: 01-01-2022	

BASE AND RISER DETAIL

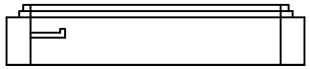

RISER DETAIL

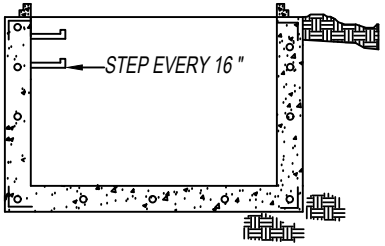

SECTIONAL ELEVATION

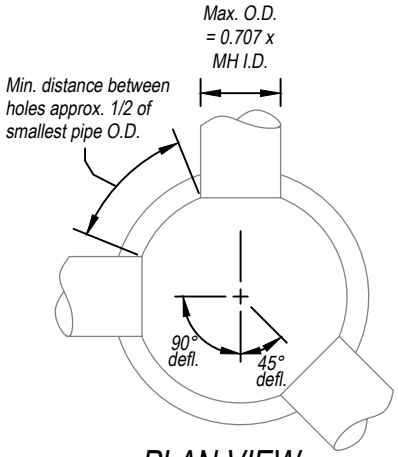

PLAN VIEW

		MANHOLE DIA. (IN.)				
Pipe Dia.	Req'd* Opening	48	60	72	84	96
15"	23"	85	>90	>90	>90	>90
18"	27"	83	>90	>90	>90	>90
21"	30"	72	>90	>90	>90	>90
24"	36"	55	85	>90	>90	>90
30"	42"	_	65	90	>90	>90
36"	48"	_	45	75	90	>90
42"	56"	_	_	50	70	90
48"	63"	_	_	15	45	70
54"	70"	_	_	_	30	56

* Opening = Pipe Dia. + (wall thickness x 2) + 3.5" free space

STANDARD DETAILS: STORM	7.11
City of Auburn	
DEPARTMENT: ENGINEERING	REVISIONS:
SCALE: N.T.S.	
DRAWN BY: GINA McCRICKARD	
CITY ENGINEER: Alison Frazier	
APPVD. BY: Alison Frazier	
IMPLEMENTED: 01-01-2022	

SLOPED PAVED HEADWALL

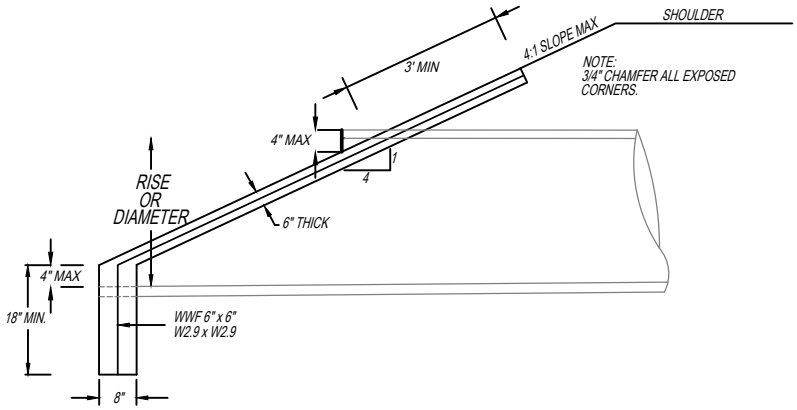

SLOPED HEADWALL ELEVATION

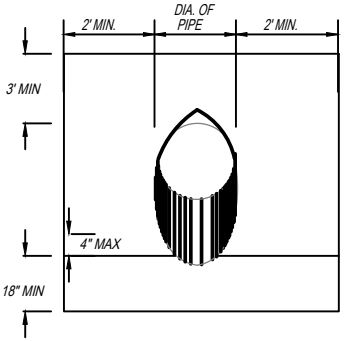

END VIEW

STANDARD DETAILS: STORM	7.12
City of Auburn	
DEPARTMENT: ENGINEERING	REVISIONS:
SCALE: N.T.S.	
DRAWN BY: GINA McCRICKARD	
CITY ENGINEER: Alison Frazier	
APPVD. BY: Alison Frazier	
IMPLEMENTED: 01-01-2022	

WINGED HEADWALL

HEADWALL DETAIL

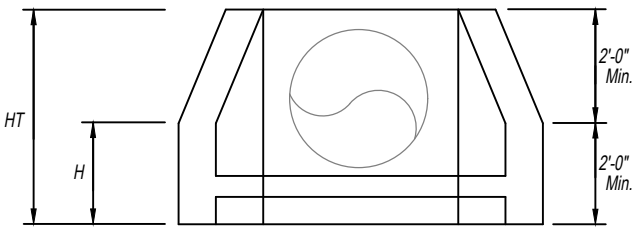

WINGED HEADWALL ELEVATION

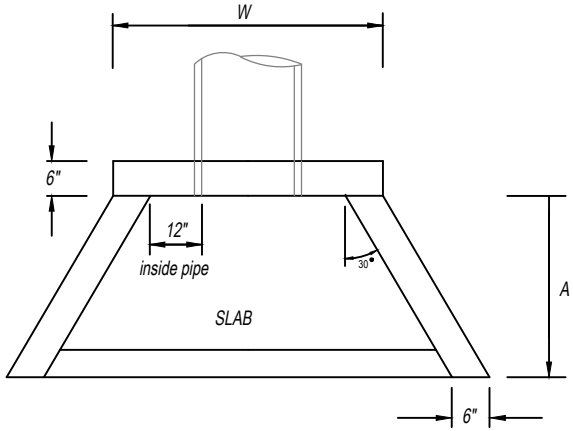

WINGED HEADWALL PLAN

PIPE SIZE CHART

PIPE SIZE	A MIN.	W MIN.	H MIN.	HT MIN.
15 IN	4 FT	DIA.+3 FT	2 FT	4 FT
18 IN	4 FT	DIA.+3 FT	2 FT	4 FT
24 IN	4 FT	DIA.+3 FT	2'-6"	4 FT
30 IN	4.5 FT	DIA.+3 FT	2'-6"	4'-6"
36 IN	5 FT	DIA.+3 FT	3 FT	5 FT
42 IN	5 FT	DIA.+3 FT	3 FT	6 FT
48 IN	5.5 FT	" " " "	3 FT	6'-6"
54 IN	6 FT	" " " "	3'-6"	7 FT
60 IN	6.5 FT	" " " "	3-6"	7'-6"
72 IN	7 FT	" " " "	4 FT	8 FT

NOTE: HEADWALL HEIGHT MAY VARY FROM THE CHART WITH APPROVAL OR RECOMMENDATION OF THE CITY ENGINEER.

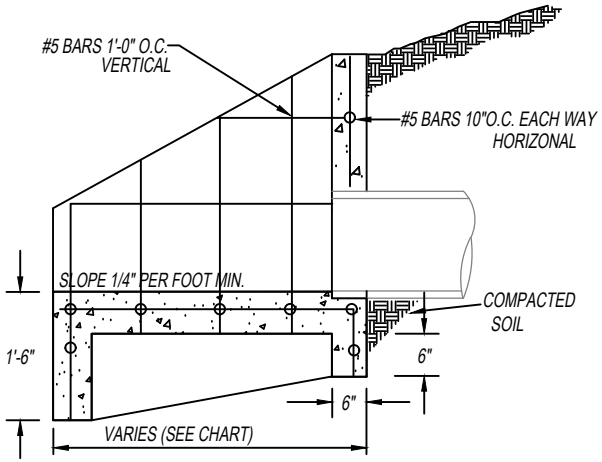

SECTIONAL ELEVATION

STANDARD DETAILS: STORM	7.13
City of Auburn	
DEPARTMENT: ENGINEERING	REVISIONS:
SCALE: N.T.S.	
DRAWN BY: GINA McCRICKARD	
CITY ENGINEER: Alison Frazier	
APPVD. BY: Alison Frazier	
IMPLEMENTED: 01-01-2022	

RIP RAP SWALE

RIPRAP DITCH SECTION

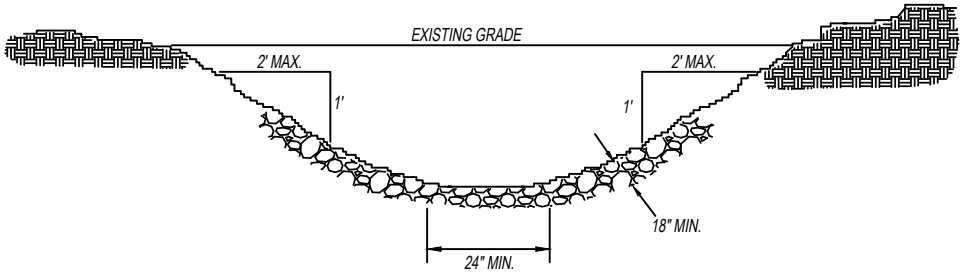

NOTE:

1. BOTTOM WIDTH IS DETERMINED BY ENGINEER.
2. A 3:1 SIDE SLOPE IS PREFERRED, BUT NO SLOPE CAN EXCEED 2:1.

PIPE SIZE	BOTTOM WIDTH MINIMUM
15 IN	2 FT
18 IN	2 FT
24 IN	3 FT
30 IN	3 FT
36 IN	4 FT
42 IN	4 FT
48 IN	5 FT
54 IN	5 FT
60 IN	6 FT
72 IN	7 FT

STANDARD DETAILS: STORM 7.14

City of Auburn

DEPARTMENT: ENGINEERING	REVISIONS:
SCALE: N.T.S.	
DRAWN BY: GINA McCRICKARD	
CITY ENGINEER: Alison Frazier	
APPVD. BY: Alison Frazier	
IMPLEMENTED: 01-01-2022	

HDPE PIPE INSTALLATION

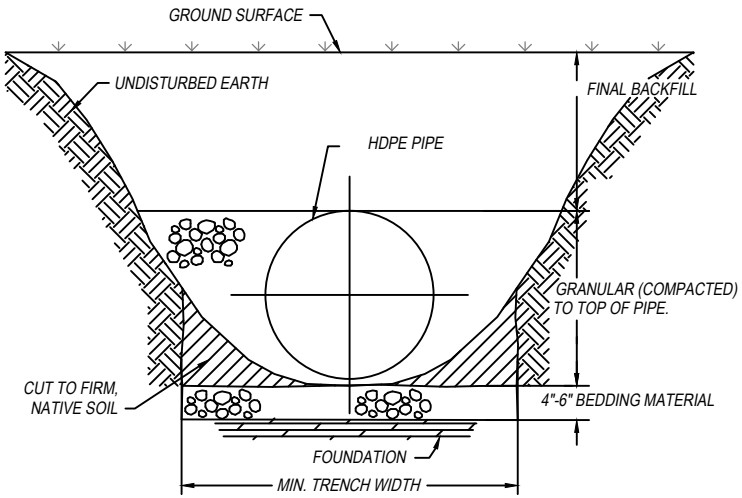

TYPICAL OPEN DITCH CROSS-SECTION
(N.T.S.)

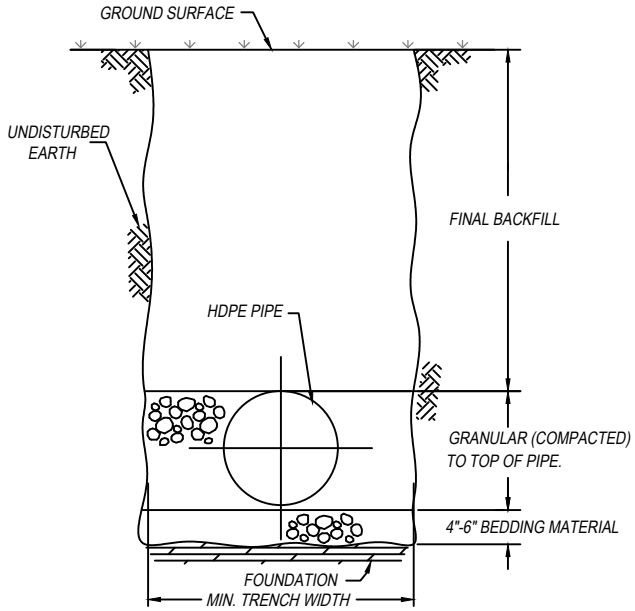

TYPICAL TRENCH CROSS-SECTION
(N.T.S.)

STANDARD DETAILS: STORM	7.15
City of Auburn	
DEPARTMENT: ENGINEERING	REVISIONS:
SCALE: N.T.S.	
DRAWN BY: GINA McCRICKARD	
CITY ENGINEER: Alison Frazier	
APPVD. BY: Alison Frazier	
IMPLEMENTED: 01-01-2022	

HDPE PIPE INSTALLATION

NOTES

1. BEDDING AND BACKFILL MATERIAL SHALL BE CLASS I MEETING ASTM D 2321. SEE DEFINITIONS BELOW.

2. TO PREVENT MIGRATION OF FINES AND LOSS OF PIPE SUPPORT FOR INSTALLATIONS WHERE SIGNIFICANT GROUND-WATER FLOW IS ANTICIPATED, CLASS I BEDDING AND BACKFILL MUST BE USED AND THE ENTIRE PERIMETER OF THE ENCASEMENT SHALL BE WRAPPED WITH AN APPROVED GEOTEXTILE FABRIC.

3. FOR INSTALLATIONS WHERE THE TRENCH BOTTOM IS UNSTABLE, UNDERCUT TO A DEPTH AS REQUIRED BY THE ENGINEER AND REPLACE WITH A SUITABLE BEDDING MATERIAL, PLACED IN 6-INCH LIFTS.

4. ALL HIGH-DENSITY POLYETHYLENE (HDPE) PIPE USED FOR CULVERT AND STORMDRAIN APPLICATIONS SHALL CONFORM TO THE REQUIREMENTS OF AASHTO M294, TYPE S, CURRENT EDITION AND VERIFIED THROUGH THE PLASTIC PIPE INSTITUTE (PPI) THIRD PARTY CERTIFICATION PROGRAM. ALL HDPE PIPE DELIVERED AND USED SHALL BEAR THE THIRD PARTY ADMINISTERED PPI SEAL.

5. INSTALLATIONS WHICH MEASURE OVER 15 FEET OF FILL FROM TOP OF PIPE TO FINISHED GRADE LEVEL ARE TO BE APPROVED BY CITY ENGINEER

ASTM D 2321 MATERIAL DEFINITIONS:
CLASS I - ANGULAR CRUSHED STONE OR ROCK, DENSE OR OPEN GRADED WITH LITTLE TO NO FINES. (1/4" TO 1.5" IN SIZE). INCLUDED NOT LIMITED TO SIZES 5, 57, 67, 8, 9, 10, & 610.

UNLESS SPECIFIED BY THE ENGINEER, MINIMUM RECOMMENDED TRENCH WIDTH SHALL BE AS FOLLOWS:

NOMINAL DIAMETER (IN.)	MIN. TRENCH WIDTH (IN.)
15	34
18	39
24	48
30	56
36	64
42	72
48	80
60	96

STANDARD DETAILS: STORM 7.16

City of Auburn

DEPARTMENT: ENGINEERING	REVISIONS:
SCALE: N.T.S.	
DRAWN BY: GINA McCRICKARD	
CITY ENGINEER: Alison Frazier	
APPVD. BY: Alison Frazier	
IMPLEMENTED: 01-01-2022	

This page intentionally left blank.

APPENDIX S. Stormwater Storage Facility Final Certification

This page intentionally left blank.

City of Auburn

Stormwater Storage Facility Final Certification Form

Engineering Services Department
161 North Ross Street
Auburn, Alabama 36830
(334) 501-7390 FAX (334) 501-7294
www.auburnalabama.org

Project Name: _____

Storage Volume Summary:

	2-Year	5-Year	10-Year	25-Year	100-Year
Design Volume					
As-Built Volume					

Outlet Device Elevation Summary:

	Size and Description Information		Design Elevation	As-Built Elevation
	Design	As-Built		
Outlet Device #1				
Outlet Device #2				
Outlet Device #3				
Outlet Device #4				
Outlet Device #5				
Emergency Spillway				
Bottom of Pond				

(As necessary, please provide any comments or other information necessary to accurately describe the as-built storage facility conditions in a separate Memorandum and attach to this form)

By placing my professional stamp and signature on this form, I certify that this storage facility is constructed in accordance with the approved design on file with the City of Auburn and that all temporary sediment storage components have been removed. I further certify that the all drainage areas designed to be attenuated in the storage facility in fact do drain to this facility and the outlet peak discharge rates are equal to or less than the peak discharge rates as approved for the development.

Signed: _____ Seal:

Date:_____

This page intentionally left blank.

APPENDIX T. Stormwater Storage Facility Operations

This page intentionally left blank.

STATE OF ALABAMA
LEE COUNTY

STORMWATER STORAGE FACILITY OPERATION AND MAINTENANCE AGREEMENT

THIS AGREEMENT, made and entered into this the _____ day of _____ _____, by and between The City of Auburn, hereinafter referred to as City, and _____ _____, hereinafter referred to as Owner;

WITNESSETH

THAT WHEREAS, Owner is this day accepting responsibility for perpetual care, operation, maintenance, and associated liabilities of the storm water storage facility installed on that certain real property known as _____ , as described in the deed and as shown on the plat thereof recorded in the Deed Book _____ , Page _____ , and/or Plat Book _____ , Page _____ Lee County Court House; and

WHEREAS, as part of construction of the development the City's Phase II Storm Water Ordinance required that a storm water storage facility be constructed; and

WHEREAS, the Owner accepts responsibility for maintenance of the storm water storage facility listed below as prescribed in the attached Operation and Maintenance Plan; and

WHEREAS, the Owner grants access to the City to inspect the storm water storage facility; and

WHEREAS, the Owner understands that this Agreement shall endure to the benefit of his successors in title, whomsoever the may be in the future.

NOW, THEREFORE, it is understood and agreed by and between the parties:

1. Maintenance of the storm water storage facility shall be the sole responsibility of the Owner.
2. The responsibility for maintenance of the storm water storage facility shall pass in the chain of title to the Owner's successor in interest.
3. Operation and maintenance will be in accordance with previously approved Operation and Maintenance Plan.
4. Access is granted to the City to carry out all provisions of the City's Phase II Storm Water Ordinance, including but not limited to inspections of the storm water storage facility.
5. The City will provide a copy of its inspection report to the Owner, and any required maintenance or remedial work identified in the report must be completed within 60 days.
6. The Owner will submit evidence that the required maintenance and/or remedial repairs identified during the City's inspection have been completed within 60 days of receipt of the inspection report.
7. Failure to follow the Operations and Maintenance Plan and/or complete necessary repairs identified during the City's inspection will result in enforcement actions.

Future communications in writing, from the City to the Owner, shall be sent to the Owner's address, as stated below.

In Witness Whereof, the parties have executed this Agreement the day and year above first written.

By: _____
OWNER

_____
GRANTOR'S SIGNATURE

_____
ADDRESS

_____
CITY, STATE

_____
TELEPHONE NUMBER

I, _____ , a Notary Public of said County and State, certify that _____ personally appeared before me this day and acknowledged that he/she is _____ of _____ , an Alabama company and that by authority duly given and as the act of the _____ company, the foregoing instrument was signed in its name and by its _____, sealed with its corporate seal and/or attested by him/her as its _____.

Witness my hand and seal this _____ day of day _____, _____.

_____
Notary Public

(SEAL)

My Commission Expires: _____.

APPENDIX T-1. Subdivision Operation and Maintenance Agreement

This page intentionally left blank.

Subdivision Stormwater Storage Facility Operations & Maintenance Agreement

This agreement made and entered into this _____ day of _____ 20____, by and between the City of Auburn, hereinafter referred to as CITY, and _____ _____ hereinafter referred to as DEVELOPER;

WITNESSETH:

WHEREAS, the DEVELOPER intends to construct a development known as _____ _____, located on lots _____ _____, as shown on the plat thereof recorded in the Deed Book _____, Page _____, and/or Plat Book _____, Page _____ Lee County Court House, herein referred to as the DEVELOPMENT; and

WHEREAS, construction of the DEVELOPMENT requires, by the CITY, that the DEVELOPER construct a stormwater storage facility in accordance with the CITY's stormwater management requirements; and

WHEREAS, the stormwater management facility servicing the DEVELOPMENT is located on lot(s) _____ _____, as described in the Deed Book _____, Page _____, and/or Plat Book _____, Page _____ Lee County Court House, herein referred to as the PROPERTY; and

WHEREAS, the DEVELOPER intends to establish a Homeowner's Association which is primarily responsible for the maintenance of landscaping thereon, and maintenance of the stormwater storage facility within the PROPERTY. Operation and maintenance of the stormwater storage facility shall be in accordance with the previously approved Operation and Maintenance Plan; and

WHEREAS, the DEVELOPER understands that this Agreement shall inure to the benefits of his successors in title, whomsoever they may be in the future.

NOW THEREFORE, in consideration of the mutual covenants and agreements, IT IS AGREED, as follows:

1. Each lot in the DEVELOPMENT, and any future subdivision of lots within the DEVELOPMENT, shall have attached to it an equal and undividable ownership in the PROPERTY and each and every lot owner, including lots retained by the DEVELOPER, shall be considered the "OWNER" of the stormwater storage facility(s) located on the PROPERTY. Subject to the other terms of the agreement, the Homeowner's Association shall, as the agent of the OWNER, thereafter be primarily responsible for the landscaping and maintenance of the stormwater storage facility located on the PROPERTY. If the Homeowner's Association is never created, is not responsive, or is dissolved, then the OWNER shall be responsible for all obligations of this agreement.

2. The CITY is authorized to access the PROPERTY to inspect the storm water storage facility as necessary to ascertain that the practices are being maintained and operated in accordance with the approved stormwater management plan.

3. The CITY is authorized to perform the corrective actions identified in the annual stormwater storage facility inspections report if the OWNER or Homeowner's Association does not make the required corrections in the specified time period.

4. Each lot in the DEVELOPMENT, and any future subdivision of lots within the DEVELOPMENT, shall be jointly and severally liable for any expense or cost incurred by the CITY to preserve, maintain, or restore the stormwater storage facility, or landscaping located on the PROPERTY. The CITY shall be empowered, without notice of hearing, to levy a special assessment against each OWNER within the DEVELOPMENT, and any future subdivision of the lots within the DEVELOPMENT, and each and every OWNER agrees to pay for any such special assessment for expenses incurred by the CITY for the maintenance of stormwater facility(s) should they not be maintained by the OWNER or the Homeowner's Association.

5. DEVELOPER, OWNER, and Homeowner's Association agree to indemnify and old harmless the CITY, its board members, employees, agents, and officers from any costs, damage, loss, claim, suit, liability or award which may arise, come, be brought or incurred or assessed because of the existence of, and action or failure to act with respect to the stormwater storage facility, and the drainage and utility easements on the PROPERTY or because of any adverse effect upon any person or property related or alleged to be related to the stormwater storage facility and drainage and utility easements. The CITY shall have the right to defend any such claim and DEVELOPER, OWNER, and Homeowner's Association shall reimburse the CITY for any and all costs and/or expenses, including but not limited to attorney's fees, which the CITY may incur as a result of such claims.

6. The rights and obligations created by this Agreement shall be covenants running within the DEVELOPMENT and future subdivision thereof and shall inure to the benefit of, and be binding upon, the parties, their heirs, personal representatives, successors and assigns.

In Witness Whereof, the parties have executed this Agreement the day and year above first written.

By: _____ (DEVELOPER)

_____ (GRANTOR'S SIGNATURE)

_____ (ADDRESS)

_____ (CITY, STATE)

_____ (TELEPHONE NUMBER)

CITY OF AUBURN, ALABAMA
A Municipal Corporation

By: _____

Its: _____

STATE OF ALABAMA

LEE COUNTY

I, the undersigned authority, a Notary Public in and for said County, in said State, hereby certify that

_____, whose name is signed to the foregoing instrument, on behalf of the Developer, and who is known to me, acknowledged before me on this date that, being informed of the contents of the foregoing document, he/she executed the same voluntarily on the day the same bears date.

Given under my hand and official seal this the _____ day of _____, 2012.

_____
Notary Public

Commission Expires _____

STATE OF ALABAMA

LEE COUNTY

I, the undersigned authority, a Notary Public in and for said County, in said State, hereby certify that

_____, whose name is signed to the foregoing instrument, on behalf of the City of Auburn, Alabama, and who is known to me, acknowledged before me on this date that, being informed of the contents of the foregoing document, he/she executed the same voluntarily on the day the same bears date.

Given under my hand and official seal this the _____ day of _____, 2012.

_____

Notary Public

Commission Expires _____